ANTELOPE VALLEY
AIR QUALITY MANAGEMENT DISTRICT

New Source Review/Federal Operating Permit Evaluation Document
for
Thirteen New Permit Units

Preliminary Determination/Decision - Statement of Basis
for
Modification to

FOP Number:102301816
For:
Northrop Grumman Aeronautics Systems Corporation
Facility:
Northrop Grumman Aeronautics System

Document Date: 02/23/24
Submittal date to EPA/CARB for review: 02/23/24
EPA/CARB 45-day Commenting Period ends: 04/08/24
Public Notice Posted: 02/23/24
Public Commenting Period ends: 03/25/24
Permit Issue date on or about: 04/09/24

Permitting Engineer:
Taylor Morais

2551 West Avenue H, LANCASTER, CA 93535
PHONE: (661) 723-8070 • Email: ENGINEERING@AVAQMD.CA.GOV

A. Introduction

1. Application and Setting

Background:

Federal Operating Permit, (FOP) number: 102301816) for Northrop Grumman Corporation, located at 3520 E Avenue M Palmdale, CA 93550. The facility is designed to assemble, maintain, and modify military aircraft. Equipment at this facility includes the following: Abrasive Blasting equipment, HVLP Paint Spray Guns, Paint Spray Booths, Paint Spray Hangars, Portable Aircraft Ground Support Equipment, Emergency Internal Combustion Engines, Boilers, Gasoline Dispensing Facilities, Military Jet Fuel Truck Loading/Unloading Facility, Military Jet Fuel Hydrant Fueling/Defueling System, Military Jet Fuel Storage Truck Loading and Unloading Facility, Jet Fuel Storage Tanks, and an LPG Pressurized Storage Tank.

The Antelope Valley Air Quality Management District (AVAQMD or District) received an application on November 1st, 2023, for the construction of the following at the Northrop Grumman Palmdale Facility (Northrop Grumman or Facility):

1. B/421 Paint Hangar/HEPA Filters/Concentrator/Regenerative Thermal Oxidizer/Acid Scrubber
2. B/421 6-MMBtu Boilers – 8 Total
3. B/421 350 kW (566 bhp) Natural Gas-Fired Emergency Generator
4. Site 4 Lift Station 350 kW (398 bhp) LPG-Fired Emergency Generator
5. B/333 300 kW (472 bhp) LPG-Fired Emergency Generator

An application for Title V Modification to Northrop Grumman FOP accompanied the application for construction. A copy of this application material can be viewed in Appendix C. The District determined the application materials to be complete.

Northrop Grumman is classified as a Major Facility pursuant to District Rule 3001 – Title V Permits Definitions, as this facility has a Potential to Emit (PTE) greater than 25 tons per year or more of Oxides of Nitrogen (NOx), Volatile Organic Compounds (VOC) and Hazardous Air Pollutants (HAP). Facility wide emissions caps are in place for Particulate Matter less than 10 Microns in Size (PM_{10}) and VOC. The proposed equipment is subject to BACT and Offset requirements for the Nonattainment Air Pollutant/Precursors of NOx, but not for VOC due to the facility VOC emissions cap which remains unchanged. This document serves as the preliminary determination to revise the Title V permit as necessary.

Additionally, Northrop Grumman is defined as a Major Facility pursuant to District Rule 1301 – NSR Definitions, as the facility has a PTE greater than the threshold amounts specified for NOx, VOC, and HAPs. The facility is a non-major source for all other criteria pollutants. This document also serves as the NSR Preliminary Decision on the application submitted by Northrop Grumman pursuant to District Rule 1302 – New Source Review Procedure, section (D)(1).

2. Description of Project

Northrop Grumman plans the following facility changes:

1. Installing a paint hangar at B/421 Site 4 (Phase III) consisting of a Global Finishing Systems 215.6' L x 120' W X 33.5' H cross-draft paint hangar with air recirculation to lower energy use requirements; pending District Permit S014890. The system also incorporates multiple stages of dry-filter particulate capture. The first stage, a blanket filter, covers an area of 176' W x 30' H. The system includes a NESHAP-compliant bag filter exhaust system followed by a HEPA filter system rated at an efficiency of 99.99 @ 0.3 microns. VOC-laden air stream is routed through two rotary concentrators, connected to a regenerative thermal oxidizer system, and then through an acid scrubber before exhausting to the atmosphere: pending District Permit C014892.

2. Installing eight (8) new 6 MMBtu boilers at B/421 Site 4, B-1 through B-8; pending District Permits: B014894, B0148995, B014896, B014897, B014898, B014899, B014900, and B014901. The units will provide hot water and heating for the new B/421 Phase III hangar HVAC. The proposed equipment is Cleaver Brooks Model CFCE-700-6000-125HW boilers, a packaged watertube hot water boiler equipped with low NOx burners. The units will be fueled with natural gas at approximately 6000 ft^3/hr per unit.

3. Installing a new emergency generator at B/421, Site 4; pending District Permit E014893. The equipment will be used as backup power for the new paint hangar, providing power to the building's hangar door, filter door, and passenger elevators. The unit is a Power Solution International (PSI) Engine Model PSI-NGE 18.3L Turbo Emergency or Non-Emergency Stationary Engine, EPA Engine Family XPSIB18.3NGP, 350 KW. It is powered by a 536 bhp Rolls Royce engine Model MTU 10V0183 GS350 18.3L CAC. The unit is fueled with natural gas and equipped with a 3-way catalyst.

4. Replacing the emergency generator at the sewer lift station at Site 4; pending District Permit E014903. The unit is a Power Solution International (PSI) Engine Model PSI HD 18.3L Turbo Engine Charge Air Cooling, EPA Engine Family XPSIB18.3NGP, 350 KW. It is powered by a 398 BHP Rolls Royce engine Model MTU 10V0183 GS350 18.3L CAC. The unit is fueled with LPG and equipped with a 3-way catalyst.

5. Replacing the emergency generator at B/333, Site 3, AFP42; pending District Permit E014902. The equipment will be used as backup power for the building. The unit is a Power Solution International (PSI) Engine Model PSI-21.9L CAC LP (Gen Set MTU 12V0183 GS400). The engine is rated at 274 kW, powered by a 472 BHP Rolls Royce engine. The unit is fueled with LPG and equipped with a 3-way catalyst.

B. Title V Permit/FOP – Significant Permit Modification

1. Proposed Changes to FOP

The proposed changes to the FOP are indicated in the red-line version of the draft FOP dated February 23, 2024. Additionally, a description and explanation of those changes are indicated below:

PART I: INTRODUCTORY INFORMATION

This section of the Federal Operating Permit contains general information about the Northrop Grumman facility, including facility identifying information (section A), a description of the facility (section B), and a description of the facility's equipment (section C).

Changes made to this section of the FOP:

- Updated Responsible Official.
- Added Authority to Construct No. E014893 Natural Gas Emergency Generator to be installed at Building 421 at Site 4.
- Added Authority to Construct Nos. E014902 and E014903 for LPG-fired Emergency Generators to be installed at Building 333 at site 3, and the sewer lift station at site 4, respectively.
- Added Authority to Construct Nos. B014894-B014901 for eight (8) 6 MMbtu/hr Boilers to be installed at site 4.
- Added Authority to Construct Nos. S014890 and C014892 for the Paint Hangar and the HEPA Filters/Concentrator/ RTO control device to be installed at site 4.

PART II: FACILITYWIDE APPLICABLE REQUIREMENTS; EMISSIONS LIMITATIONS; MONITORING, RECORDKEEPING, REPORTING, AND TESTING REQUIREMENTS; COMPLIANCE CONDITIONS; COMPLIANCE PLANS

This section of the Federal Operating Permit contains requirements applicable to the entire facility and equipment (section A), facility-wide monitoring, recordkeeping, and reporting requirements (section B), and facility-wide compliance conditions (section C).

Changes made to this section of the FOP:

- No changes to this section

PART III: EQUIPMENT SPECIFIC APPLICABLE REQUIREMENTS; EMISSIONS LIMITATIONS; MONITORING, RECORDKEEPING, REPORTING, AND TESTING REQUIREMENTS; COMPLIANCE CONDITIONS; COMPLIANCE PLANS

This section of the Federal Operating Permit contains equipment-specific applicable requirements including emission limitations, monitoring and recordkeeping, reporting and testing, and compliance plans.

Changes made to this section of the FOP:

- Section A – 13 new permit units added

PART IV: STANDARD FEDERAL OPERATING PERMIT CONDITIONS

No changes were made to this section

PART V: OPERATIONAL FLEXIBILITY

No changes were made to this section

PART VI: CONVENTIONS, ABBREVIATIONS, DEFINITIONS

No changes were made to this section

PART VII: DISTRICT SIP HISTORY AND CITATIONS

No changes were made to this section

APPENDIX A

No changes were made to this section

C. NSR Analysis

1. Determination of Emissions

Table 1 - Potential to Emit (PTE) of New Emission Units

Emissions Unit	Permit #	Control Type	Control Permit #	PM_{10} (tpy)	SO_2 (tpy)	NOx (tpy)	CO (tpy)	VOC (tpy)
PAINT HANGAR	S014890	HEPA FILTERS/CONCENTRATOR/ RTO	C014892	0.1032	0.0081	0.4905	0.2133	1.3161
8-6 MMBTU/HR BOILERS	B014894-B014901	LOW NOX BURNERS	NA	1.5978	0.3510	1.7646	3.0696	0.3516
B/421 NATURAL GAS-FIRED ICE	E014893	3-WAY CATALYST	NA	0.0017	0.0001	0.0468	0.0623	0.0312
B/333 PROPANE-FIRED ICE	E014902	3-WAY CATALYST	NA	0.0048	0.0003	0.0390	0.0520	0.0260
Lift Station 350 PROPANE-FIRED ICE	E014903	3-WAY CATALYST	NA	0.0039	0.0003	0.0329	0.0439	0.0219
		Total PTE (tpy)		**1.7114**	**0.3598**	**2.3737**	**3.4410**	**1.7468**

2. Determination of Requirements

a. BACT Evaluation

Best Available Control Technology (BACT) is required:

- for each new Permit Unit that has a Potential to Emit 25 pounds or more per day of any Nonattainment Air Pollutant or its Precursors; or,

- when located at a new or Modified Facility that emits, or has the Potential to Emit, twenty-five (25) tons per year or more of any Nonattainment Air Pollutant or its Precursors (District Rule 1303(A)(3)).

Pursuant to Rule 1303, “any new or Modified Facility which emits, or has the Potential to Emit, 25 tons per year or more of any Nonattainment Air Pollutant shall be equipped with BACT for each new or Modified Permit Unit”. The facility is Modified as defined in Rule 1301 due to the net emission

increase associated with the addition of the new Emission Units.

The following sources were used to determine BACT for each class and category of equipment as discussed below:

- Santa Barbara County Air Pollution Control District BACT Clearinghouse;
- San Joaquin Valley Unified Air Pollution Control District (SJVUAPCD) BACT Guidelines;
- South Coast Air Quality Management District (SCAQMD) BACT Guidelines and LAER/BACT Determinations for Major Polluting Facilities;
- Bay Area Air Quality Management District BACT/TBACT Workbook;
- Monterey Bay Air Resources District BACT Guidelines;
- Environmental Protection Agency (EPA) the BACT/LAER Clearinghouse, and
- California Air Resources Board (CARB) BACT Clearinghouse

One – New Spray Hangar Equipped with a Concentrator/RTO/Acid Scrubber (Pending District Permits S014890 & C014892)

The proposed equipment are emission sources of NOx, VOCs, and HAPs. This facility operates under a 712 ton/year VOC emissions cap and the proposed new equipment does not increase the VOC emissions cap; therefore, it does not result in a net increase of VOC since this VOC limit was offset in a previous NSR action allowed by District Rule 1304(C)(2)(d). Aerospace coating application equipment permitted in AVAQMD as well as those found in the Bay Area AQMD, South Coast AQMD, CARB and EPA clearinghouses results in a determination of BACT for the proposed class and category of VOC control as a VOC control system with an overall efficiency of at least 81% (carbon) / 90% (other technologies); a HEPA PM control system with a control efficiency of 99.97%. This control system, with a VOC control efficiency in excess of 94% and a PM control efficiency of 99.99%; therefore, meets BACT requirements.

Eight – New 6 MMBtu/hr Natural Gas-fired Boilers (Pending District Permits B014894-B014901)

The 2020 SCAQMD BACT determination for a natural gas-fired boiler with a heat input rating of 8.4 MMBtu/hr is as follows:

VOC	NOx	SOx	CO	PM_{10}
None	≤7 ppmv dry corrected to 3% O2	Natural Gas	≤50 ppmv for watertube type, dry corrected to 3% O2	Natural Gas

The eight (8)-6 MMBtu/hr boilers, are equipped with low NOx burners, and fueled with PUC-quality natural gas that meet the requirements for BACT.

One - New Natural Gas-fired Emergency IC Engine (Pending District Permit E014893)

The 2018 MBARD BACT determination for a stationary natural gas/propane (LPG) internal combustion engine with an engine rating of ≥ 130 HP is as follows:

Engine Rating/Size	NO_x	VOC	CO
≥ 130 HP	1.5 g/bhp-hr, or 86 ppmvd @ 15% O_2	1.0 g/bhp-hr, or 163 ppmvd @ 15@ O_2	2.0 g/bhp-hr, or 186 ppmvd @15% O_2
* BACT for SOx and PM for all categories is the exclusive use of PUC-quality natural gas, commercial propane, butane, liquefied petroleum gas, or a combination of such gases.			

The use of this natural gas-fired engine equipped with a 3-way catalyst, used for emergency operation, with guaranteed emissions levels that are less than current BACT, and fueled with PUC-quality natural gas, meets the requirement for achieved-in-practice BACT.

Two - New LPG-fired Emergency IC Engine (Pending Districts Permits E014902 & E014903)

The 2018 MBARD BACT determination for a stationary natural gas/propane (LPG) internal combustion engine with an engine rating of ≥ 130 HP is as follows:

Engine Rating/Size	NO_x	VOC	CO
≥ 130 HP	1.5 g/bhp-hr, or 86 ppmvd @ 15% O_2	1.0 g/bhp-hr, or 163 ppmvd @ 15@ O_2	2.0 g/bhp-hr, or 186 ppmvd @15% O_2
* BACT for SOx and PM for all categories is the exclusive use of PUC-quality natural gas, commercial propane, butane, liquefied petroleum gas, or a combination of such gases.			

The use of this LPG-fired engine equipped with a 3-way catalyst, used for emergency operation, with guaranteed emissions levels that are less than current BACT, and fueled with PUC-quality natural gas, meets the requirement for achieved-in-practice BACT.

b. Offsets Evaluation

AVAQMD Regulation XIII – New Source Review requires offsets for non-attainment pollutants and their precursors emitted by the addition of new equipment or modifications resulting in a net increase at existing major sources. The Northrop facility is an existing major source of VOC; however, the facility has a monthly VOC limit of 118,625 pounds in any 30-day period based on a 30-day rolling average that has been fully offset. This equipment will operate within the existing limit and there will, therefore, be no net increase in VOC emissions.

Offsets are required for the emission increase in NOx at a ratio of 1.3:1. A total of 6,172 pounds of NOx are required to offset the 4,747.5 pound increase in NOx.

Northrop Grumman plans to surrender the following permits for equipment that was never constructed/operated:

- B010699 – Portable Start Cart
- B010972 – Portable Start Cart
- E012785 – 1468 BHP IC Engine
- E013600 – 207 BHP IC Engine

Northrop Grumman plans to use the ERCs originally allocated to these units to provide a portion of the required 6,172 pounds of NOx required to permit all equipment that is the subject of this application.

- B010699 and B010972 – (177 + 89) * 1.3 = 346 pounds of NOx (per Engineering Evaluation Page 5 dated July 30, 2010)
- E012875 – 211 pounds of NOx (per Engineering Evaluation dated 9/19/2017)
- E013600 – 59 pounds of NOx (per Engineering Evaluation dated 11/21/2019)

In addition, Northrop Grumman is surrendering the following permits which create Simultaneous Emission Reductions (SER) as addressed in the B/333 and Sewer Lift Station engine replacements. District Rule 1304, section (E)(2)(a)(ii), allows Historic Actual Emissions to be equal to the verified Actual Emissions of an Emissions Unit, or combination of Emissions Units, averaged for any two years of the five-year period which immediately precedes the date of application which the APCO has determined is more representative of Facility operations. SERs were calculated from historical actuals presented below:

- E006780 – (39.47 + 10.27) / 2 = 24.87 or 25 pounds of NOx
- E006782 – (2.22 + 0.83) / 2 = 1.52 or 2 pounds of NOx

The SERs do not produce sufficient emission reductions from the shutdown of permits E006780 and E006782, and the ERCs originally allocated for B010699, B010972, E012785, and E013600 that are being surrendered to offset the increase in NOx emissions associated with the proposed new equipment. Therefore, the increase in NOx emissions will be partially offset by utilizing the SERs and ERCs generated above, with the remaining offset burden being met via ERCs held by Northrop Grumman. Northrop Grumman is surrendering 5,529 credits from ERC certificate AV0029 to meet the remaining offsets.

Origin of ERC - Certificate AV0029

As additional credits were required (5,529 pounds of NOx), the applicant proposed NOx credits held on certificate AV0029. The NOx credits held on AV0029 were transferred from AV0017 from a previous Northrop Grumman permitting action. The NOx credits transferred from AV0017 originated in the South Coast AQMD before the AVAQMD was created and separated from South Coast AQMD in 1997. Northrop Grumman held NOx ERCs in the South Coast AQMD and requested to transfer these NOx ERCs into the newly formed AVAQMD.

South Coast AQMD denied the transfer of these NOx ERCs but did allow the transfer of VOC ERCs. At the advisement of South Coast AQMD, Northrop Grumman sold the NOx ERCs that they owned in the South Coast AQMD and purchased VOC ERCs that were eligible for transfer. The District has been unable to determine the origin of the VOC ERCs despite requesting the original banking evaluation from South Coast AQMD. Additionally, these VOC ERCs transferred into the newly formed AVAQMD were converted to NOx credits in 2001 at a ratio of

1.6 to 1. However, due to the denial by South Coast AQMD to transfer the NOx ERCs owned by Northrop Grumman, the resultant purchase of VOC ERCs which were eligible for transfer, and the inter-pollutant conversion of VOC credits to NOx credits at a 1.6 to 1 ratio, the value of the credits held on certificate AV0029 has been adjusted several times since the time of banking. Due to the transfer from South Coast AQMD because of the formation of the AVAQMD in 1997, and their provenance for purposes of surplus being unknown, the AVAQMD has deemed them to be surplus for this permitting action. Furthermore, since the source of the ERCs cannot be determined, a Reasonably Available Control Technology (RACT) ERC adjustment upon use is not possible. Therefore, ERCs will be applied at full value, without adjustment.

Table 2 - Emission Credits Summary

	NOx Credits Pounds	**Comment**
B010699 & B010972	346	Engineering Eval Dated 07/30/2010
E012875	211	Engineering Eval Dated 09/19/2017
E013600	59	Engineering Eval Dated 11/21/2019
E006780	25	Average of Two Representative Years of Historical Usage
E006782	2	Average of Two Representative Years of Historical Usage
Subtotal	**643**	
Total NOx Required for Project	6,172	= 4,747.5 X 1.3
ERC Balance Required	5,529	= 6,172-643
ERC Cert AV0029	7,948	ERC Registry; See: https://avaqmd.ca.gov/files/81681de41/ERC+Registry+072623+Website.pdf
Remaining Balance	**2,419**	= 7,948-5,529 Cert AV0029 will be retired; New Cert for remaining balance to be issued

The surrender of a portion of AVAQMD ERC #AV0029 provides the remaining 5,529 pounds of NOx required to permit the new equipment. AVAQMD will issue an ERC Certificate for the remaining balance of 2,419 pounds per year of NOx.

3. Determination of Requirements for Toxic Air Contaminants

a. District Rule 1401:

The proposed permitting action triggers Rule 1401 – New Source Review for Toxic Air Contaminants pursuant to:

- 1401(B)(1): Northrop has applied to permit thirteen (13) new emissions units.
- 1401(B)(2): The new emission units have the potential to emit TAC/HAP
- 1401(B)(3): The facility is a major source for HAP and is subject to a NESHAP

Rule 1401 imposes limits on the allowable excess cancer, chronic hazard, and acute hazard risks from a facility. Northrop must demonstrate that emissions from the new operations in conjunction with those from its current operations do not result in:

- an excess cancer risk greater than one in one million, or
- an excess cancer risk greater than ten in one million if the facility has applied Toxics – Best Available Control Technology (T-BACT);
- a chronic hazard index greater than one;
- an acute hazard index greater than one.

A health risk assessment was prepared in support of the proposed permit action in combination with all other site activities. That assessment is summarized below.

b. Risk evaluation

Air toxics emissions from the new coating operations are based on the estimated number of shipsets that can be produced at each stage in the implementation process. Emissions from new or proposed combustion equipment are based on their potential to emit. Air toxics emissions from other operations at the facility are based on the results of the 2022 Comprehensive Emission Inventory Report that was submitted to the AVAQMD in February of 2023.

Impact on Excess Cancer Risk

A summary of the impact of the equipment associated with the permit action alone and in conjunction with all existing operations is presented below.

Type	Easting m	Northing m	Scenario	Sources	Excess Cancer Risk	
						per million
MEIR	403394	3834342	30 Year, (Resident), OEHHA Derived	Permit Action	1.98E-07	0.20
				2022 CEIR Sources	5.32E-06	5.32
				All	5.52E-06	5.52
			70 Year, (Resident), OEHHA Derived	Permit Action	2.29E-07	0.23
				2022 CEIR Sources	6.30E-06	6.30
				All	6.53E-06	6.53
			9 Year, (Resident), OEHHA Derived	Permit Action	1.57E-07	0.16
				2022 CEIR Sources	3.73E-06	3.73
				All	3.89E-06	3.89
MEIW	403000	3834400	25 Year (Worker), OEHHA Derived	Permit Action	1.73E-08	0.02
				2022 CEIR Sources	5.56E-07	0.56
				All	5.73E-07	0.57
PMI	40215	3834299	30 Year, (Resident), OEHHA Derived	Permit Action	6.60E-07	0.66
				2022 CEIR Sources	1.74E-05	17.43
				All	1.81E-05	18.09

Operation of the equipment associated with the permit action along with all other existing operations will result in an excess cancer risk of 5.52 in one million at the maximally exposed individual resident (MEIR). This estimate is based on the 30-year, derived OEHHA exposure scenario. Almost all the increase in excess cancer risk is due to emissions of diesel engine particulate and hexavalent chromium. Emissions from the equipment associated with the permit action result in an estimated

excess cancer risk of 0.20 in one million at the MEIR or about 3.6% of the total. Risk is largely due to emissions of cadmium, 7,12-dibenzo[a]anthracene, arsenic, strontium chromate, and PCBTF.

Operation of the equipment associated with the permit action along with all other existing operations will result in an excess cancer risk of 0.57 in one million at the maximally exposed individual worker (MEIW). This estimate is based on the 25-year, derived OEHHA exposure scenario. Again, almost all the increase in excess cancer risk is due to emissions of diesel engine particulate and hexavalent chromium. Emissions from the equipment associated with the permit action result in an estimated excess cancer risk of 0.02 in one million at the MEIW or about 3.5% of the total.

Emissions from the Phase III paint hangar will be controlled by HEPA filtration which reduces particulate emissions such as hexavalent chromium by 99.99%. The paint hangar will also be equipped with a rotary concentrator/regenerative thermal oxidizer that will reduce volatile pollutant emissions by 96%. The requirements of Rule 1401 are met.

Impact on the Risk from Chronic Hazards

Operations associated with the permit action will emit chemicals that are listed by HARP as chronic hazards.

The impact of these sources in conjunction with existing equipment has been determined with results summarized below:

Type	Easting m	Northing m	Sources	MAX HI
MEIR	403394.0	3834342.0	Permit Action	0.0033
			2022 CEIR Sources	0.0157
			All	0.0190
MEIW	403000.3	3834400.0	Permit Action	0.0046
			2022 CEIR Sources	0.0165
			All	0.0211
PMI	402154.8	3834299.0	Permit Action	0.0104
			2022 CEIR Sources	0.0504
			All	0.0608

The health impacts of the new program on chronic hazards are minimal and satisfy the requirements for chronic risk imposed by Rule 1401.

Impact on the Risk from Acute Hazards

While an analysis of excess cancer risk or chronic hazards evaluates risk at locations for which there is a possibility of long-term exposure (the MEIR and MEIW), an acute analysis considers impacts at any location outside of the facility property line and is based on one-hour maximum emission rates. Results at the maximally exposed individual (MEI) are compared to a threshold value of one.

Coatings planned for use in equipment associated with the permit action contain chemicals that are listed by HARP as acute hazards. Other operations at the facility also result in the emissions of chemicals that contribute to acute hazards. These include operations that occur routinely throughout the year as well as those that occur quite sporadically. Sporadic emissions occur as the result of emergency IC engines, ground support equipment, and jet engine testing operations. For example,

most IC engines are tested on a monthly basis for less than one hour.

The maximum acute hazard index at all locations outside of the control of Northrop Grumman or Air Force Plant 42 personnel occurs to the north of the facility property line. The acute hazard index at this location is estimated at 0.498 which is below the level at which no adverse acute hazard health impacts are expected to occur.

Conclusions

The operation of the proposed equipment included in the permit action will meet the requirements of AVAQMD Rule 1401.

4. Rules and Regulations Applicable to the Proposed Project

District Rules:

Rules 203 – Permit to Operate. Any equipment that may cause the issuance of air contaminants must obtain authorization for such construction from the Air Pollution Control Officer. Northrop Grumman is in compliance with this rule as they have appropriately applied for a District permit for all new equipment and maintains District permits for all residing equipment per Part II, section A of their FOP.

Rule 204 – Permit Conditions. To ensure compliance with all applicable regulations, the Air Pollution Control Officer may impose written conditions on any permit. Northrop Grumman complies with all applicable regulations per Part II, section A of their FOP.

Rule 206 – Posting of Permit to Operate. Equipment shall not operate unless the entire permit is affixed upon the equipment or kept at a location for which it is issued and will be made available to the District upon request. Northrop Grumman complies with this regulation per Part II, section A of their FOP.

Rule 207 – Altering or Falsifying of Permit. A person shall not willfully deface, alter, forge, or falsify any issued permit. Northrop Grumman complies with this regulation per Part II, section A of their FOP.

Rule 209 – Transfer and Voiding of Permits. Northrop Grumman shall not transfer, whether by operation of law or otherwise, either from one location to another, from one piece of equipment to another, or from one person to another. When equipment that has been granted a permit is altered, changes location, or no longer will be operated, the permit shall become void. Northrop Grumman complies with this regulation per Part II, section A of their FOP.

Rule 210 – Applications. Northrop Grumman provided all the required information to correctly address the modification pursuant to this rule.

Rule 212 – Standards for Approving Permits. This rule establishes baseline criteria for approving permits by the District for certain projects. Pursuant to AV Rule 212(C)(1), this facility is not located within 1000 feet of a school, as corroborated by satellite imagery via Google Earth.

Emissions from the proposed equipment and this facility are not sufficient to trigger any of the thresholds referenced in this rule. This project is not considered to be a Significant Project, as defined under AV Rule 212, and therefore, is not subject to the noticing requirements for Significant Projects.

Rule 217 – Provisions for Sampling and Testing Facilities. This rule requires the applicant to provide and maintain requirements for sampling and testing. Northrop Grumman is in compliance with this rule per Part II, section A of their FOP.

Rule 219 – Equipment not Requiring a Permit. This rule exempts certain equipment from District Permit. Northrop Grumman is in compliance with this rule per Part II, section A.

Rule 221 – Federal Operating Permit Requirement. Northrop Grumman is in compliance with this rule, as they currently hold and maintain a Federal Operating Permit.

Rule 301/312 – Permit Fees/Fees for Federal Operating Permits. Northrop Grumman's annual permit fees are due by the applicable dates.

Rule 401 – Visible Emissions. This rule limits visible emissions opacity to less than 20 percent (or Ringlemann No. 1). In normal operating mode, visible emissions are not expected to exceed 20 percent opacity. Northrop Grumman has specific operating conditions that enforce compliance with this rule, specifically Part II, section A.

Rule 403 – Fugitive Dust. This rule prohibits fugitive dust beyond the property line of any emission source. Northrop Grumman has specific operating conditions to ensure compliance with this condition, specifically Part II, section A.

Rule 403.2 – Fugitive Dust Control for the Antelope Valley Planning Area. This rule ensures that the NAAQS for PM_{10} will not be exceeded due to anthropogenic sources of fugitive dust within the Antelope Valley Planning Area. Northrop Grumman is in compliance with this rule per Part II, section A.

Rule 404 – Particulate Matter Concentration. Northrop Grumman shall not discharge into the atmosphere from this facility, particulate matter (PM) except liquid sulfur compounds, in excess of the concentration at standard conditions, shown in Rule 404, Table 404 (a).
(a) Where the volume discharged is between figures listed in the table the exact concentration permitted to be discharged shall be determined by linear interpolation.
(b) This condition shall not apply to emissions resulting from the combustion of liquid or gaseous fuels in steam generators or gas turbines.
(c) For this condition, emissions shall be averaged over one complete cycle of operation or one hour, whichever is the lesser time period. Northrop Grumman adheres to this rule per Part II, section A of their FOP.

Rule 405 – Solid Particulate Matter, Weight. Northrop Grumman shall not discharge into the atmosphere from this facility, solid PM including lead and lead compounds in excess of the rate shown in Rule 405, Table 405(a):
(a) Where the process weight per hour is between figures listed in the table, the exact weight of permitted discharge shall be determined by linear interpolation.

(b) For this condition, emissions shall be averaged over one complete cycle of operation or one hour, whichever is the lesser time period. Northrop Grumman adheres to this rule per Part II, section A of their FOP.

Rule 407 – Liquid and Gaseous Air Contaminants. This rule limits CO emissions from facilities. Northrop Grumman meets this requirement by complying with the operating conditions listed in Part II, section A of their FOP.

Rule 408 – Circumvention. This rule prohibits hidden or secondary rule violations. The proposed modification as described is not expected to violate Rule 408. Northrop Grumman meets this requirement by complying with the operating conditions listed in Part II, section A of their FOP.

Rule 409 – Combustion Contaminants. This rule limits the emissions of combustion contaminants exceeding 0.23 gram per cubic meter (0.1 grain per cubic foot) of gas calculated to 12 percent of carbon dioxide (CO2) at standard conditions averaged over a minimum of 25 consecutive minutes. Northrop Grumman meets this requirement by complying with the operating conditions listed in Part II, section A of their FOP.

Rule 430 – Breakdown Provisions. Any Breakdown that results in a violation of any rule or regulation as defined by Rule 430 shall be properly addressed pursuant to this rule. Northrop Grumman meets this requirement by complying with the operating conditions listed in Part II, section A of their FOP.

Rule 431.1 and 431.2 – Sulfur Content of Fuels. Northrop Grumman is limited to use of the following quality fuels for fuel types specified elsewhere in this permit: PUC quality natural gas fuel - sulfur compounds shall not exceed 16 parts per million (ppm) calculated as hydrogen sulfide at standard conditions; diesel fuel - sulfur content shall not exceed 0.5 percent by weight.

Compliance with Rule 431.1 and 431.2 fuel sulfur limits is assumed for PUC-quality natural gas fuel and CARB-certified diesel fuel. Records shall be kept on-site and available for review by District, state, or federal personnel at any time. The sulfur content of non-CARB certified diesel fuel shall be determined by use of American Society for Testing and Materials (ASTM) method D 2622-82 or ASTM method D 2880-71, or equivalent. Northrop Grumman is required to adhere to this rule per Part II, section A.

Rule 442 – Usage of Solvents. This rule reduces VOC emissions from VOC containing materials or equipment that is not subject to any other rule in Regulation XI. Northrop Grumman meets this requirement by complying with the operating conditions listed in Part II, section A of their FOP.

Regulation X – National Emission Standards for Hazardous Air Pollutants. Pursuant to Regulation X, Northrop Grumman is required to comply with all applicable ATCMs, and under state law, a federal National Emission Standards for Hazardous Air Pollutants (NESHAP) becomes the State ATCM, unless the Air Resources Board (ARB) has already adopted an ATCM for the source category and associated hazardous air pollutant(s).

The proposed new equipment is required to comply with the requirements of 40 CFR 63 Subpart GG - National Emission Standards for Aerospace Manufacturing and Rework Facilities per Part II section A as well as through operating conditions listed in Part III for each affected piece of

equipment.

Rule 1000 – National Emission Standards for Hazardous Air Pollutants (NESHAP). Rule 1000 adopts all applicable provisions regarding standards of performance for new stationary sources as outlined in 40 CFR 61. Northrop Grumman complies with 40 CFR 61, Subpart M – NESHAP for Asbestos per conditions in Part II, section C.

Rule 1110.2 – Internal Combustion Engines. The purpose of this rule is to establish limits for emissions associated with internal combustion engines. Northrop Grumman complies with this rule by operating conditions listed in Part III for each applicable IC engine.

Rule 1107 – Metal Parts and Products Coatings. This rule limits the emission of VOC from coatings associated with Metal Parts and Products. Northrop Grumman meets the requirements of this rule by complying with the operating conditions listed in Part II, section A of their FOP.

Rule 1113 – Architectural Coatings. This rule limits the quantity of VOC in Architectural Coatings. Northrop Grumman meets the requirements of this rule by complying with the operating conditions listed in Part II, section A of their FOP.

Rule 1124 – Aerospace Assembly and Component Coating Operations. This rule limits the emission of VOC from coatings associated with Aerospace Assembly and Component Coating Operations. Northrop Grumman meets the requirements of this rule by complying with the operating conditions listed in Part II, section A of their FOP.

Rule 1136 – Wood Products Coatings. This rule limits the emission of VOC from coatings associated with Wood Products. Northrop Grumman meets the requirements of this rule by complying with the operating conditions listed in Part II, section A of their FOP.

Rule 1145 – Plastic, Rubber, and Glass Coatings. This rule limits the emission of VOC from coatings associated with Plastic, Rubber, and Glass. Northrop Grumman meets the requirements of this rule by complying with the operating conditions listed in Part II, section A of their FOP.

Rule 1162 – Polyester Resins Operations. This rule limits the emission of VOC from polyester resin operations. Northrop Grumman meets the requirements of this rule by complying with the operating conditions listed in Part II, section A of their FOP.

Rule 1168 – Adhesive Applications. This rule limits the emission of VOC from adhesives. Northrop Grumman meets the requirements of this rule by complying with the operating conditions listed in Part II, section A of their FOP.

Rule 1171 – Solvent Cleaning Operations. This rule limits the emission of VOC from solvent cleaning. Northrop Grumman meets the requirements of this rule by complying with the operating conditions listed in Part II, section A of their FOP.

Rule 1402 – Control of Toxic Air Contaminants from Existing Sources. This rule controls the emission of toxic air contaminants from existing sources. Northrop Grumman is in compliance with this rule.

Federal Regulations

40 CFR 60, Subpart A – NSPS General Provisions and 40 CFR 60 Subpart JJJJ - Standards of Performance for Stationary Spark Ignition Internal Combustion Engines. This regulation applies to newly constructed, modified, or reconstructed spark-ignited units, regardless of size and the fuel that is combusted. The rule contains emission limits for NOx, CO, and VOC, as well as a limit on the sulfur content of the gasoline fired. Northrop Grumman complies with this rule by operating conditions listed in Part III for each applicable spark-ignited IC engine.

40 CFR 60, Subpart A – NSPS General Provisions and 40 CFR 60 Subpart Dc – Standards of Performance for Small Industrial-Commercial-Institutional Steam Generating Units. This regulation applies to newly constructed, modified, or reconstructed boilers with a maximum design heat input capacity between 10 MMBtu/hr and 100 MMBtu/hr. This regulation applies to the 12.4 MMBtu/hr proposed boiler that was permitted in a prior application. Permit conditions have been included that specify recordkeeping requirements and fuel certification as required by the NSPS.

40 CFR 61, Subpart M – NESHAP for Asbestos. Northrop Grumman complies with 40 CFR 61, Subpart M – NESHAP for Asbestos per conditions in Part II, section C.

40 CFR 63 Subpart A and 40 CFR 63 Subpart GG - National Emission Standards for Hazardous Air Pollutants for Aerospace Manufacturing and Rework Facilities. Northrop Grumman complies with 40 CFR 63, Subpart GG per Part II section A as well as through operating conditions listed in Part III for each affected piece of equipment.

40 CFR 63 Subpart A and 40 CFR 63 Subpart WWWW - National Emissions Standards for Hazardous Air Pollutants: Reinforced Plastic Composites Production. Northrop Grumman does not engage in Reinforced Plastic Composites Production therefore this regulation is not applicable.

40 CFR 63 Subpart A and 40 CFR 63 Subpart DDDDD - National Emission Standards for Hazardous Air Pollutants for Major Sources: Industrial, Commercial, and Institutional Boilers and Process Heaters. Northrop Grumman complies with 40 CFR 63, Subpart DDDDD per conditions listed in Part II, section A.

40 CFR 63 Subpart A and 40 CFR 63, Subpart ZZZZ – NESHAP for Stationary Reciprocating Internal Combustion Engines. Northrop Grumman complies with this rule by operating conditions listed in Part III for each applicable IC engine.

40 CFR 64, Compliance Assurance Monitoring. The CAM rule aims to have owners and operators maintain their control devices at levels that assure compliance. The rule allows owners and operators to design CAM plans on current requirements and operating practices, to select representative parameters upon which compliance can be assured, to establish indicator ranges - or procedures for setting the indicator ranges - for the parameters, to use performance testing and other information to verify the parameters and ranges and to correct control device performance problems as expeditiously as practicable.

CAM applies to each Pollutant Specific Emissions Unit (PSEU) when it is located at a Major Facility that is required to obtain a Title V, Part 70 or 71 permit, and it meets all of the following criteria. “PSEU” means an emissions unit considered separately with respect to each regulated air

pollutant.

The PSEU must:
a. Be subject to an emission limitation or standard [40 CFR 64]; AND,
b. Use a control device to achieve compliance [40 CFR 64.2(a)(2)]; AND,
c. Have the **potential pre-control** emissions that exceed or are equivalent to the major source threshold. [40 CFR 64.2(a)(3)]

The Northrop Grumman AFP 42 facility does not have any equipment subject to CAM. While the paint hangar under S014890 does vent to a regenerative thermal oxidizer under C0014892, the uncontrolled PTE is less than 25 tons/year of VOC.

40 CFR 82, Protection of Stratospheric Ozone. Northrop Grumman APF 42 facility complies with this regulation per Part IV conditions 20 and 21.

5. NSR Preliminary Decision – Conclusion

The District has reviewed the proposed modifications and applications for Northrop Grumman and conducted a succinct written analysis as required by District Rule 1302, section (D)(1)(b). The District has determined that the proposed modifications and application are in compliance with all applicable rules and regulations as proposed and when operated in compliance with the terms of the permit conditions.

6. Title V/FOP Preliminary Determination – Conclusion

The District has reviewed the proposed modifications and application for Northrop Grumman and conducted a succinct written analysis as required by District Rule 3003, section (B)(1)(a). The District has determined that the proposed permit modification is in compliance with all applicable rules and regulations as proposed when operated in the terms of the permit conditions given herein, and the attached draft FOP.

This preliminary determination was submitted to USEPA, CARB, and the public for review and comment on 02/23/24. The public notice for the preliminary determination was published on 02/23/24, with the public comment ending 03/25/24 pursuant to District Rule 3007. To view the public notice please refer to Appendix A of this document or visit the AVAQMD website https://avaqmd.ca.gov/permitting-public-notices.

Comments received are included in Appendix B.

APPENDIX A
PUBLIC NOTICE

Noticing requirements pursuant to District Rule 1302:

- Published in a newspaper of general circulation – Antelope Valley Press on 2/23/2024
- Mailed and/or emailed to AVAQMD contact list of persons requesting notice of actions (see the contact list following the Public Notice in Appendix A) on 2/23/2024
- Posted on the AVAQMD Website at the following link: http://avaqmd.ca.gov/permitting-public-notices on 2/23/2024

Antelope Valley Air Quality Management District
2551 West Avenue H Lancaster, CA 93536
661-723-8070
www.avaqmd.ca.gov
Barbara Lods, Executive Director

NOTICE OF PRELIMINARY DETERMINATION

NOTICE IS HEREBY GIVEN THAT *Northrop Grumman Systems Corporation (Palmdale Aircraft Integration Center of Excellence)* located at 3520 E Avenue M in Palmdale, CA 93550 has submitted applications for thirteen new permit units and to modify their Federal Operating Permit (102301816) pursuant to the provisions of the Antelope Valley Air Quality Management District (AVAQMD) Regulations XIII and XXX. The facility is designed to assemble, maintain, and modify military aircraft. The facility is a major source for NOx, VOC and HAP. The proposed action results in an emissions increase and constitutes a significant modification of the Title V permit. All new permit units are subject to the requirements of New Source Review. Emissions increases for NOx are required to be offset pursuant to Rule 1303 and shall be met utilizing Simultaneous Emission Reductions associated permit units which are being retired in conjunction with this permitting action and Emission Reductions Credits.

REQUEST FOR COMMENTS: Interested persons are invited to submit written comments and/or other documents regarding the terms and conditions of the proposed NSR modification of *Northrop Grumman Systems Corporation's* Federal Operating Permit. If you submit written comments, you may also request a public hearing on the proposed renewal of the Federal Operating Permit. To be considered, comments, documents and requests for public hearing must be submitted no later than 5:00 P.M. on March 25, 2024, to the AVAQMD, at the address listed below.

PETITION FOR REVIEW: Federal Operating Permits are also subject to review and approval by USEPA. If USEPA has not objected to a proposed permit, and the AVAQMD has not addressed a public comment in a satisfactory manner, the public may petition USEPA, Region IX, Operation Permits Section at 75 Hawthorne Street, San Francisco, CA 94105 within 60 days after the end of the USEPA review period for USEPA to reconsider its decision not to object to the permit.

AVAILABILITY OF DOCUMENTS: The proposed Federal Operating Permit, as well as the application and other supporting documentation are available for review at the AVAQMD offices, Antelope Valley Air Quality Management District, 2551 West Avenue H, Lancaster CA 93536. In addition, these documents are available on the AVAQMD website and can be viewed at following link: https://avaqmd.ca.gov/permitting-public-notices. Please contact Taylor Moras at 661-723-8070, extension 24, or at tmorais@avaqmd.ca.gov for additional questions pertaining to this action and/or corresponding documents.

**Traducción en español esta disponible por solicitud. Por favor llame: (661) 723-8070*

APPENDIX B

Comments Received/Correspondence

APPENDIX C

APPLICATION PACKAGE

1. LOCAL PERMIT APPLICATION & TITLE V MODIFICATION PACKAGE

2. RULE 1401 HEALTH RISK ASSESSMENT

PERMIT APPLICATION
B/421 PHASE III PAINT HANGAR
AND ASSOCIATED CONTROL DEVICE

OCTOBER 2023

Prepared for:
NORTHROP GRUMMAN CORPORATION
Palmdale, California

•••

Prepared by:
Verdant Environmental
South Pasadena, California

TABLE OF CONTENTS

1

Permit Application Forms 1

2

Process Description.....2
- Introduction 2
- Equipment Description 2
- Operating Schedule.....6

3

Emission Calculations.....7
- Proposed Emissions 7
- HAP Emissions.....7

4

Rule Compliance Evaluation 8
- General Requirements.....8
- New Source Requirements 9
- NESHAP Requirements.....10

5

Fee Evaluation.....11

TABLES

Table 1 Materials to be used in B/421 Phase III spray hangar

Table 2 Estimated controlled VOC emissions from materials to be used in B/421 Phase III spray hangar

Table 3 Particulate emissions from B/421 spray hangar

Table 4 Natural gas consumption in the Rotary Concentrator and Regenerative Thermal Oxidizer

Table 5 Emissions from natural gas combustion in the rotary concentrator and regenerative thermal oxidizer

APPENDICES

Appendix A General Arrangement Drawing

1

PERMIT APPLICATION FORMS

Antelope Valley Air Quality Management District

2551 West Avenue H, Suite 102, Lancaster, CA 93536
661.723.8070
www.avaqmd.ca.gov

Application for Spray Booth and Paint Spray Gun Only

Please type or print. **Please refer to Rule 301 for Application Filing Fee.**

1. Permit to be Issued to (name of company to receive permit): Northrop Grumman Systems Corporation - Palmdale

1a. Federal Tax ID #: 95-1055798

2. Mailing/Billing Address (for the above company name): 3520 East Avenue M, PA11/4G, Palmdale, CA 93550

3. Facility or Business Name on License (for equipment location): Northrop Grumman Systems Corporation

4. Facility Address/Location of Equipment (if same as company, enter "Same"): same

Facility UTM or Lat/Long: 425E/3830N

5. Contact Name and Title: George Jung

E-mail Address: George.Jung@ngc.com

Phone and Fax #s: 661 266-5394

6. Application is hereby made for the Authority to Construct (ATC) and Permit to Operate (PTO) the following equipment: Global Finishing Systems 215' x 120' x 33.5 crossdraft paint hangar

7. Application is for: ■ New Construction ☐ Modification* ☐ Change of Owner*

***For modification or change of owner:** Current permit #:

8. Type of Organization (check one): ☐ Individual Owner ☐ Partnership ■ Corporation ☐ Utility ☐ Local Agency ☐ State Agency ☐ Federal Agency

9. Distances (feet and direction to closest):

Fenceline 2100, N Residence 6500, NE Business 3400, W School 13100, S

10. General Nature of Business: Aerospace manufacturing

11. Principal Product: Aircraft

12. Facility Annual Throughput by Quarters (percent):

Jan-Mar	Apr-Jun	Jul-Sep	Oct-Dec
25 %	25 %	25 %	25 %

13. Expected Facility Operating Hours:

Hrs/Day	Days/Wk	Wks/Yr	Total Hrs/Yr
24	7	52	8760

14. Do you claim Confidentiality of Data? (If yes, state nature of data in an attachment.) ☐ Yes ■ No

15. Equipment Information:

Manufacturer: Global Finishing Systems

Model #: Custom Serial #: TBD

Booth Dimensions (specify units):
☐ Open Spray ☐ Automotive Booth ☐ Bench Type Booth ■ Floor Type Booth

Exhaust fan (if present): Rating (hp): 2@200 Fan Diameter (inches): _____

Manometer across exhaust filters? ■ Yes ☐ No Minimum Pressure Drop (in inches of water): _____

16. Filters:

	Type and Material	Number	Width	Length	Thickness
Inlet					
Exhaust First Stage					
Exhaust Second Stage	3-Stage NESHAP - Roll Media/Panel Filter/Bag Filter	1120	24	24	12
Exhaust Third Stage	HEPA	416	24	24	12

Antelope Valley Air Quality Management District

43301 Division Street, Suite 206, Lancaster, CA 93535-4649
661.723.8070 FAX 661.723.3450
www.avaqmd.ca.gov

Application for Spray Booth and Paint Spray Gun Only

17. Application:

Article Sprayed (check all that apply):
☒ Aerospace ☐ Architectural ☐ Metal ☐ Plastic ☐ Composite ☐ Wood ☐ Motor Vehicle (Group I) ☐ Motor Vehicle (Group II)
☐ Other (specify): _____

Minimum size of articles sprayed (feet): Width _____ Length _____ Height _____

Method of Application (check all that apply):
☐ Air Atomization ☐ Pressure Atomization (airless) ☐ Combined Air and Airless ☐ Electrostatic
☒ High Volume Low Pressure (HVLP) ☒ Hand ☒ Other (specify): Robot

Gun or Spray Cleaning Method: ☐ Enclosed Gun Cleaning System ☐ Open Flush ☐ Manual Wipe
☐ Other (specify): _____

18. Disposition:

☒ Air Dried ☐ Oven Dried, Baked, or Cured
If Oven Dried, Baked, or Cured, specify: ☐ Part of Booth ☐ Separate Enclosure
Oven (if present) is: ☐ Gas Fired ☐ Electric Rating and Max T (specify units): _____

19. Materials Applied:

	VOC Content	Vapor Pressure	Maximum Use	
Type	**lb/gal or gm/liter**	**mmHg @ 20° C**	**gal/l per day**	**gal/l per year**
Enamel	see application Table 1			
Topcoat				
Primer				
Sealer				
Stain				
Added Thinner				
Clean-up Solvent				
Surface Preparation Solution				
Other				
Other				

Signature of Responsible Official:		**Official Title:** Environmental
Typed or Printed Name of Responsible Official: George Jung	**Phone Number:** 661 266-5394	**Date Signed:** 10/04/2023
Official Use Only		

Antelope Valley Air Quality Management District

2551 West Avenue H, Suite 102, Lancaster, CA 93536
Phone 661.723.8070
www.avaqmd.ca.gov

Application for Authority to Construct and Permit to Operate

Please type or print. **Please refer to Rule 301 for Application Filing Fee.**

1. Permit to be Issued to (name of company to receive permit):
Northrop Grumman Systems Corporation - Palmdale

1a. Federal Tax ID #:
95-1055798

2. Mailing/Billing Address (for the above company name):
3520 East Avenue M, PA11/4G, Palmdale, CA 93550

3. Facility or Business Name on License (for equipment location):
Northrop Grumman Systems Corporation

4. Facility Address/Location of Equipment (if same as company, enter "Same"):
same

Facility UTM or Lat/Long:
425E/3830N

5. Contact Name and Title:
George Jung

E-mail Address:
George.Jung@ngc.com

Phone and Fax #s:
6612665394

6. Application is hereby made for the Authority to Construct (ATC) and Permit to Operate (PTO) the following equipment:
CECO Adwest Zeolite 92.0 ZRC Concentrator + one (1) RETOX 9.5RTO95 dual chamber RTO oxidizer system and ta 2-stage acid scrubber controlling emissions from a spray hangar

7. Air Pollution Control Equipment, if any*:

(*Note that most APCEs require a separate application.)

8. Application is for:
☒ New Construction ☐ Modification* ☐ Change of Owner*

***For modification or change of owner:**
Current permit #: _____

9. Type of Organization (check one):
☐ Individual Owner ☐ Partnership ☒ Corporation ☐ Utility ☐ Local Agency ☐ State Agency ☐ Federal Agency

10. Distances (feet and direction to closest):
Fenceline 2100, N Residence 6500, NE Business 3400 W School 13100, S

11. General Nature of Business:
Aerospace manufacturing

12. Principal Product:
Aircraft

13. SIC Code (if known):
37228-06

14. Facility Annual Throughput by Quarters (percent):

Jan-Mar	Apr-Jun	Jul-Sep	Oct-Dec
25 %	25 %	25 %	25 %

15. Expected Facility Operating Hours:

Hrs/Day	Days/Wk	Wks/Yr	Total Hrs/Yr
24	7	52	8760

16. Do you claim Confidentiality of Data? (If yes, state nature of data in an attachment.) ☐Yes ☒No

Antelope Valley Air Quality Management District
43301 Division Street, Suite 206, Lancaster, CA 93535-4649
Phone 661.723.8070
www.avaqmd.ca.gov

Application for Authority to Construct and Permit to Operate

17. Stack Emissions Information

Stack #	Stack Height[1]	Stack Diameter[2]	Exhaust Temp.[3]	Exhaust Flow Rate[4]	Exhaust Velocity[5]
1	27'	2.5'	70 deg F	9500 SCFM	70 ft/sec
2					
3					

**List additional stacks on a separate sheet as needed.

Measurements Key:
1. Stack height is the distance in feet above ground level to discharge point.
2. Stack diameter is the diameter (or equivalent circular diameter) of discharge point (nearest tenth foot). If using cross-sectional area (A in square feet), equivalent diameter is D = (1.273A)^0.5
3. Exhaust temp. in degrees F, actual or estimated to nearest 50 degree F.
4. Exhaust flow rate at discharge point in actual cubic feet per minute (ACFM).
5. Exhaust velocity in feet per second, design or measured.

18. Remarks
This section may include your basis for confidentiality, process description, modification description, and so forth. If you wish to specify process information as proprietary or confidential, use this space. Note that the kinds and rates of emissions cannot be held confidential and that emissions are subject to public disclosure. Attach additional sheets as needed.

Signature of Responsible Official:		Official Title: Environmental
Typed or Printed Name of Responsible Official: George Jung	Phone Number: 661 266-5394	Date Signed: 10/04/2023

For District Use Only

Application #:	Invoice #:	Permit #:	Company/Facility #:

2

PROCESS DESCRIPTION

INTRODUCTION

The Northrop Grumman Corporation (Northrop), AVAQMD Facility ID No. 01816, is planning to install a new Paint Spray Hangar at B/421. Northrop is also planning to install a dual concentrator connected to a regenerative thermal oxidizer and an acid gas scrubber to meet Best Available Control Technology requirements.

EQUIPMENT DESCRIPTION

Northrop plans to install a Global Finishing Systems 215.5' x 120' x 33.5' cross draft paint hangar with air recirculation to lower energy use requirements. The design intent is to provide a cross draft air velocity through the hangar that falls within the range of 75-125 FPM at the asset location. To achieve this desired velocity, approximately 708,000 CFM of air in drawn through the hangar during the painting process. Of the total flow, 20-25% is exhausted from the building and 75-80% is recirculated within the process. 20-25% of the total CFM is outside air is brought into the process as make-up air. This air is then conditioned and the system is designed to allow mixing of this conditioned air with the recirculated air to provide an indoor condition that falls within 70-80°F and 50-70% relative humidity.

The system also incorporates multiple stages of dry-filter particulate capture. The first stage, a blanket filter, covers an area 176' W x 30' H. The system includes a NESHAP compliant bag filter exhaust system followed by a HEPA filter system rated at an efficiency of 99.99 @ 0.3 microns.

The exhaust air is then sent to two rotary concentrators connected to a regenerative thermal oxidizer system.

Capacity and horsepower for all the fans is as follows:

- Exhaust Fans: (2) 200 HP each
- Recirculation Fans: (6) 150 HP each

The number and type of filters is as follows:

- 3-Stage NESHAP Filters - (1,120) 24x24x12" (consists of roll media, panel filter and bag filter)
- HEPA - (416) 24x24x12 (efficiency of 99.99% @ 0.3 micron)

The exhaust air is then sent to CECO Adwest Zeolite 92.0 ZRC Concentrator + one (1) RETOX 9.5RTO95 dual chamber RTO oxidizer system and then to an acid scrubber. The rotary concentrators will capture/route to the thermal oxidizer 96% of the VOC vented to it. The control efficiency of the thermal oxidizer is 98% for an overall control efficiency of 94.08%. Manufacturer's information is summarized below:

Zeolite Rotary Concentrator

The system consists of a zeolite rotor in a steel reinforced modular housing, complete with shop assembled seals, chain drive, air heaters, process fan, motor and VFD. The RETOX RTO system includes an insulated dual chamber filled with low pressure drop ceramic heat exchanger media. The process gas flow is automatically controlled by a zero leakage poppet valve mechanism which changes the direction of the gas flow at regular intervals via an integral programmable logic control (PLC) system. An external burner is used only for a rapid initial cold startup, typically 80 minutes. Only one RETOX fan is needed for normal RTO operation. The Zeolite Rotor Concentrator provides a 20:1 concentration ratio so that for the 184,000 SCFM are concentrated into a smaller energy efficient 9,500 SCFM RETOX RTO system.

The main exhaust air stream from the paint finishing process splits into the adsorption air stream and a purge air stream. The Adwest zeolite wheel VOC concentrator module collects the volatile organic compounds from the exhaust air in the adsorption zone. The zeolite wheel rotates with a low rpm chain drive rotor to adsorb or desorb the VOCs from the process stream.

The desorption air stream is heated with a 1.98-mmBtu/hr natural gas fired duct heater to approximately 428°F. Under the elevated temperature the VOCs will be released in the desorption zone from the zeolite material with a concentration ratio of 20:1 for this application. The Purge air stream is also used to cool the zeolite material to enable VOC capture with ambient temperature in the adsorption zone.

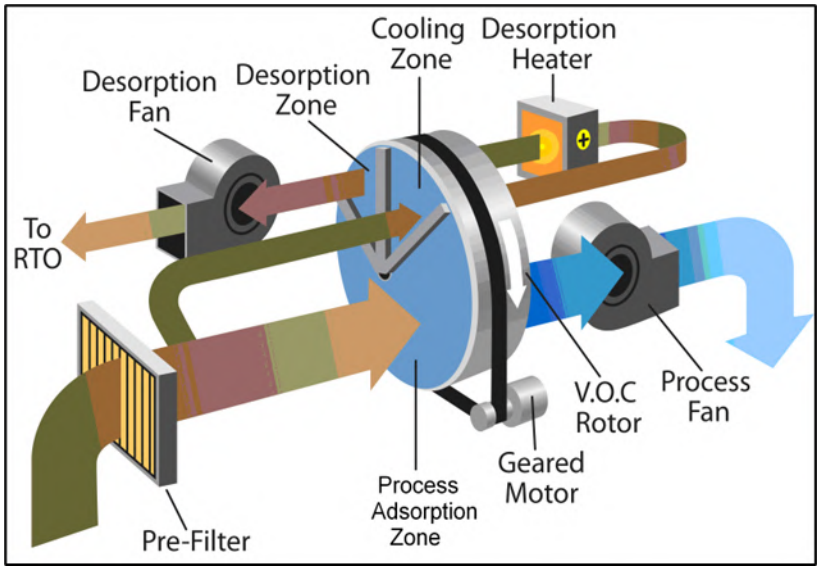

RETOX RTO System

CECO Adwest RETOX RTO Systems converts volatile organic compounds (VOC) and solvent-laden gas into carbon dioxide and water vapor.

The RETOX RTO system consists of a reinforced, insulated dual chamber filled with low pressure drop ceramic heat exchanger media. The process gas flow is automatically controlled by a zero leakage poppet valve mechanism which changes the direction of the gas flow at regular intervals via an integral programmable logic control (PLC) system. A 1-mmBtu/hr external burner is used only for a rapid initial cold startup, typically 80 minutes. Only one RETOX fan is needed for normal RTO operation.

Due to the abundant oxygen content of the process gas, complete combustion readily occurs when the ignition point is reached in the RTO oxidizer (typically 1500-1600°F). Process hydrocarbons are converted to carbon dioxide and water vapor. With a sufficient concentration of VOCs in the incoming process gas, the exothermic of the solvents will be enough so that the destruction of VOCs will be self-sustaining with no auxiliary heat energy required from the fuel source.

The high level of up to 95% heat recovery at full flow achieved is the result of regenerative heat transfer. The VOC laden process air enters a porous bed filled with high temperature, low pressure drop turbulent flow ceramic heat transfer media. The air is preheated by bed #1 to a maximum temperature, passes through a central combustion chamber where the hydrocarbons are oxidized to carbon dioxide and water vapor, and then exits a second bed where heat is transferred from the hot air back into the bed. To avoid an uneven temperature distribution in the RTO, the gas flow direction is changed

automatically at regular intervals by the poppet valve flow control mechanism to maintain even temperature profiles between the dual ceramic media chambers.

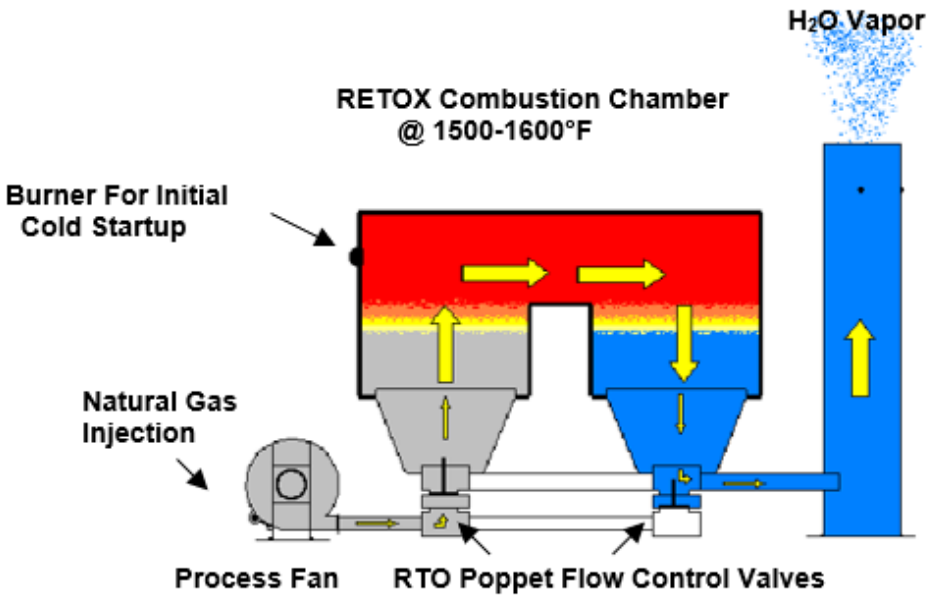

Acid Gas Scrubber

To control emissions from combustion of PCBTF (CAS No. 98-56-6) and trifluoropropylmethyl (2374-13-3) a 2-stage packed bed acid gas scrubber will be installed as follows:

Stage 1	Hastelloy Quench by FKI
Stage 2	Polypropylene Scrubber HEE-Duall Model PT505-70S

Stage 1: 5'diameter by 12' Tall

Stage 2: Scrubber Foot Print: 6'x8'x14'Tall

Overall System Envelope: 9.5'X 16'x 16'Tall

Gas Conditions:	Quench Inlet	Scrubber Outlet
Flow Rate, ACFM	16,400	11,900
Temperature, °F	454	124
Water Content	1% by Vol.	Saturated
Bulk Gas Composition	Air w/ Acid Fume	
Inlet Loading Contaminants	28 ppmv HCl & 56 ppmv HF	

Removal Efficiency	99.5% on HCl gas & 99.5% on HF gas. 99.5% on 2 micron and larger mist

OPERATING SCHEDULE

The system can operate 24 hours per day, 7 days per week, 52 weeks per year.

3

EMISSION CALCULATIONS

Pursuant to Rule 1304, the emissions change for a new facility or emissions unit is calculated, in pounds per day, from proposed emissions. Proposed emissions are based on facility throughput and a capture and control efficiency. The equipment performance guarantee is 94.08%.

PROPOSED EMISSIONS

Proposed emissions for the new system are the equipment potential to emit, defined by District Rule 1301(FFF) as the maximum capacity of the emission unit to emit any regulated air pollutant under its physical and operational design. The materials Northrop plans to use and the VOCs are included as well as annual usage and uncontrolled emissions are expressed in Table 1. Total annual controlled VOC emissions are as specified in Table 2 and will not exceed 2484 pounds per year. Total annual controlled PM emissions are contained in Table 3 and will not exceed 1.5 pounds per year. Table 4 contains the annual fuel use consumed to operate the Rotary Concentrator Desorption Heater and the RTO while Table 5 contains the criteria pollutant and HAP emissions that will result from the operation of these units.

HAP EMISSIONS

The HAP content of the materials that will be sprayed in the B/421 spray hangar are described in Rule 1401 Health Risk Assessment that accompanies this application. As well as those materials that are Rule 1401 listed. The HRA also includes emission calculations for those materials and tabulates total estimated HAP emissions.

4

RULE COMPLIANCE EVALUATION

GENERAL REQUIREMENTS

Rule 212 - Standards for Approving Permits

This equipment is not located within 1,000 feet from the outer boundary of a school. This permit application will not result in criteria pollutants in excess of the specified thresholds and emissions of toxics will not result in a MICR greater than one in one million. Notification pursuant to Rule 212 is not required.

Rule 401 - Visible Emissions

No visible emissions are expected.

Rule 402 - Nuisance

The facility will not cause or contribute to a nuisance condition.

Rule 1124 - Aerospace Assembly and Component Manufacturing Operations

Northrop will comply with all applicable provisions of Rule 1124. While we expect that the majority of the coatings used will be compliant, Northrop may also comply with provisions of paragraphs Rule 1124 (C)(1), (C)(2), and (C)(5) by using approved air pollution control equipment. The control equipment will more than meet the requirements of Rule 1124 (C) (6) which are as follows:

> (a) The control device will reduce emissions from an emission collection system by at least 95 percent (95%), by weight, or reduce the output of the air pollution control device to less than 50 ppm calculated for carbon with no dilution.
>
> (b) The system will collect at least 90 percent (90%), by weight, of the emissions generated by the sources of emissions.

Rule 1171

Compliance with Rule 1171 requirements will be maintained.

NEW SOURCE REQUIREMENTS

Regulation XIII – Criteria Pollutants

Maximum Annual Emissions

The addition of the paint spray hangar and carbon control systems will increase VOC emissions by less than 2500 pounds/year. The estimated NOx emission increase is 630 pounds per year from the concentrator adsorption heater and 319 pounds from the RTO for a total of 949 pounds per year. The estimated PM emission increase totals less than 1.5 pounds per year.

BACT Evaluation

Best Available Control Technology (BACT) is required for each new or modified permit unit at any facility that emits, or has the potential to emit, 25 tons per year or more of any nonattainment pollutant or its precursors (District Rule 1303(A)(3)). Northrop has a maximum potential to emit in excess of 25 tons per year for VOC and less than 15 tons per year for PM10. Similar types of aerospace coating application equipment permitted in AVAQMD as well as in Bay Area AQMD, South Coast AQMD, and CARB and EPA clearinghouses results in a determination of BACT for the proposed class and category of VOC control as a VOC control system with an overall efficiency of at least 81% (carbon)/90% (other technologies) and a HEPA PM control system with a control efficiency of 99.97%. This control system will meet this requirement and therefore meet BACT.

Offsets

New Source Review requires offsets for non-attainment pollutants and their precursors emitted by the addition of new equipment or modifications resulting in a net increase at existing major sources. The Northrop facility is an existing major source of VOC; however, the facility has a monthly VOC limit of 118,625 pounds in any 30-day period based on a 30-day rolling average that has been fully offset. This equipment will operate within the existing limit and there will, therefore, be no net increase in VOC emissions.

Offsets will be required for NOx at a rate of 1.3:1. A total of 1234 pounds of NOx are required to offset the 949 pound per year increase from the concentrator adsorption heater and the regenerative thermal oxidizer.

Rule 1401 – New Source Review of Toxic Air Contaminants

Northrop Grumman is submitting a Health Risk Assessment as part of this permitting effort. Risk from the proposed coating equipment in conjunction with those from all other new and existing sources will not result in an excess cancer risk exceeding ten in one million at any residential or commercial receptor. Since the new sources are equipped with T-BACT, these sources were determined to meet the requirements of Rule 1401.

5

FEE EVALUATION

Pursuant to Rule 301 (D) (1) any person who applies for the issuance of a new or modified permit and subject to the Provisions of Regulation XXX – Federal Operating Permits (Title V) shall be assessed a fee of $1008. This application filing fee is submitted with the application.

Total application fees included with this application are as follows:

- Paint spray hangar x $1008 = $1008
- Concentrator/Regenerative Thermal Oxidizer/Scrubber = $1008
- Total Fees due = $1008 + $1008 - $2016

TABLES

Table 1: Materials to be used in B/421 Phase III spray hangar

Type of Coating	QTY	Gallons	VOC (g/l)	VOC lb/gal	VOC lbs/aircraft	Total lb/year (6 aircraft)
RELEASE AGENT, MOLD	1 GAL	1	440	3.67	3.67	22.00
Silica	(1) 10 LB BAG	600	0	0.00	0.00	0.00
ADHESIVE/SEALANT	(35) 3 OZ	0.82	59	0.49	0.40	2.42
Primer	162 GAL	162	600	5.00	810.00	4860.00
ADHESIVE/SEALANT	(70) 10.3 OZ	5.63	60	0.50	2.82	16.89
ADHESIVE/SEALANT	(6) 10.3 OZ	0.482	60	0.50	0.24	1.45
EREC	450 LBS	0	0	0.00	0.00	0.00
Silicone Primer	(1)8 OZ	0.0625	37	0.31	0.02	0.12
Solvent	(1) 200LTR	52.83	860	7.17	378.62	2271.69
Silicone Primer	4 PINT	0.5	770	6.42	3.21	19.25
FLUOROSILICONE	(4) 200 ml. KITS	0.211	464	3.87	0.82	4.90
Adhesion Promoter	16 GAL	16	751	6.26	100.13	600.80
EREC	(25) 4 OZ	0.78	0	0.00	0.00	0.00
Topcoat	2 GAL	2	572	4.77	9.53	57.20
Rain Erosion	55 GAL	55	605	5.04	277.29	1663.75
EREC	90 GAL	90	409	3.41	306.75	1840.50
Primer	(2) 2 GAL	2	195	1.63	3.25	19.50
SILICONE PRIMER	8 GAL	8	720	6.00	48.00	288.00
Adhesive	2 QT	0.5	10	0.08	0.04	0.25
Adhesive Sealant	(2) 6 OZ		10	0.08	0.00	0.00
Primer	4 GAL	4	338	2.82	11.27	67.60
EREC	77 GAL	77	255	2.13	163.63	981.75
EREC	194 GAL	194	476	3.97	769.53	4617.20
EREC	552 GAL	552	650	5.42	2,990.00	17940.00
FLUOROSILICONE ADHESIVE	(10) 6OZ SEMKITS	0.468	0	0.00	0.00	0.00
FLUOROSILICONE ADHESIVE	(10) 6OZ SEMKITS	0.468	10	0.08	0.04	0.23
Silicone Adhesive	(20) 6OZ SEMKITS	0.937	0	0.00	0.00	0.00
SILICONE ADHESIVE	(50) 6OZ SEMKITS	2.34	0	0.00	0.00	0.00
Silicone Primer	65 GAL	65	720	6.00	390.00	2340.00
Silicone Primer	(1) 80Z	0.625	720	6.00	3.75	22.50
EREC	(50) 6OZ SEMKITS	2.34	0	0.00	0.00	0.00
EREC	(4) 1500 GRAM	1.02	399.1	3.33	3.39	20.35
FLUOROSILICONE	(3) 20 FT	0	0	0.00	0.00	0.00
FLUOROSILICONE	(9) 20 FT	0	0	0.00	0.00	0.00
FLUOROSILICONE	(10) 20 FT	0	0	0.00	0.00	0.00
FLUOROSILICONE	(5) 20 FT	0	0	0.00	0.00	0.00
FLUOROSILICONE	(5) 20 FT	0	0	0.00	0.00	0.00
CAAPCOAT Lusterless Coat	45 GAL	45	793.3	6.61	297.49	1784.93
Primer	2 QT	0.5	350	2.92	1.46	8.75
Topcoat	1 GAL	1	491	4.09	4.09	24.55
Topcoat	4 GAL	4	340	2.83	11.33	68.00
Topcoat	100 GAL	100	368	3.07	306.67	1840.00
Topcoat	20 GAL	20	368	3.07	61.33	368.00
Topcoat	1 GAL	1	368	3.07	3.07	18.40
Topcoat	10 GAL	10	368	3.07	30.67	184.00
TOTAL		**2079.51**			**6992.49**	**41954.97**

Table 2: Estimated controlled VOC emissions from materials to be used in B/421 Phase III spray hangar

VOC lbs/aircraft	Total lb/year (6 aircraft)	Capture Efficiency %	Capture Loss lbs/yr	Control Efficiency %	Controlled Loss lbs/yr	Total VOC Emissions lbs/yr	Overall Efficiency
6,992.49	41954.97	96	1678.20	98	805.54	2483.73	94.08%

Table 3: Particulate emissions from B/421 spray hangar

Usage		Solids	Solids	Transfer	Fallout	Uncontrolled PM	Control	PM Emissions
gal/shipset	gal/yr	lb/gal	lbs/yr	Efficiency		lbs/yr	Efficiency	lbs/yr
2079.51	24954	3.000	74862.49	0.65	0.5	13100.94	0.9999	1.31

Table 4: Natural gas consumption in the Rotary Concentrator and Regenerative Thermal Oxidizer

Unit	Capacity mmBtu/hr	Opeating Hours	Heat Input			
			mmBtu/yr	mmBtu/hr	mmscf/yr	mmscf/hr
RC Desorption Heater	1.98	8760	17344.8	1.98	17.3448	0.00198
RTO Natural Gas Injection	1	8760	8760	1	8.76	0.001

Table 5: Emissions from natural gas combustion in the rotary concentrator and regenerative thermal oxidizer

Pollutant	A2588	Emission factor		Source	RC		RTO	
	ID	lb/mmscf	lb/mmBtu		lb/year	lb/hr	lb/year	lb/hr
NOx	42603	36.3587	3.64E-02	30 ppm NOx at 3% O2	630.635	7.20E-02	318.503	3.64E-02
SOx	42401	0.6000	6.00E-04	AVAQMD Default	10.407	1.19E-03	5.256	6.00E-04
CO	42101	15.8081	1.58E-02	20 ppm CO at 3% O2	274.189	3.13E-02	138.479	1.58E-02
PM	11101	7.6000	7.60E-03	AVAQMD Default	131.820	1.50E-02	66.576	7.60E-03
PM-Filterable	11105	1.9000	1.90E-03	AVAQMD Default	32.955	3.76E-03	16.644	1.90E-03
PM10	85101	7.6000	7.60E-03	AVAQMD Default	131.820	1.50E-02	66.576	7.60E-03
PM10-Filterable	85105	1.9000	1.90E-03	AVAQMD Default	32.955	3.76E-03	16.644	1.90E-03
PM2.5	88101	7.6000	7.60E-03	AVAQMD Default	131.820	1.50E-02	66.576	7.60E-03
PM2.5-Filterable	88105	1.9000	1.90E-03	AVAQMD Default	32.955	3.76E-03	16.644	1.90E-03
VOC	43101	5.5000	5.50E-03	AVAQMD Default	95.396	1.09E-02	48.180	5.50E-03
Lead	12128	0.0005	5.00E-07	AVAQMD Default	0.009	9.90E-07	0.004	5.00E-07
Ammonia-Crit	42604	3.2000	3.20E-03	SCAQMD Default	55.503	6.34E-03	28.032	3.20E-03
Acenaphthene	83329	1.80E-06	1.80E-09	AVAQMD Default	0.000000	3.56E-09	0.000016	1.80E-09
Acenaphthylene	208968	1.80E-06	1.80E-09	AVAQMD Default	0.000000	3.56E-09	0.000016	1.80E-09
Acetaldehyde	75070	4.30E-03	4.30E-06	AVAQMD Default	0.000000	8.51E-06	0.037668	4.30E-06
Acrolein	107028	2.70E-03	2.70E-06	AVAQMD Default	0.000000	5.35E-06	0.023652	2.70E-06
Ammonia	7664417	3.20E+00	3.20E-03	AVAQMD Default	0.00000	6.34E-03	28.032000	3.20E-03
Anthracene	120127	2.40E-06	2.40E-09	AVAQMD Default	0.000000	4.75E-09	0.000021	2.40E-09
Arsenic	7440382	2.00E-04	2.00E-07	AVAQMD Default	0.000000	3.96E-07	0.001752	2.00E-07
Barium	7440393	4.40E-03	4.40E-06	AVAQMD Default	0.000000	8.71E-06	0.038544	4.40E-06
Benzaldehyde	100527	1.64E-02	1.64E-05	AVAQMD Default	0.000000	3.25E-05	0.143664	1.64E-05
Benzene	71432	8.00E-03	8.00E-06	AVAQMD Default	0.000000	1.58E-05	0.070080	8.00E-06
Benzo(a)anthracene	56553	1.80E-06	1.80E-09	AVAQMD Default	0.000000	3.56E-09	0.000016	1.80E-09
Benzo(a)pyrene	50328	1.60E-06	1.60E-09	AVAQMD Default	0.000000	3.17E-09	0.000014	1.60E-09
Benzo(b)fluoranthene	205992	1.80E-06	1.80E-09	AVAQMD Default	0.000000	3.56E-09	0.000016	1.80E-09
Benzo(g,h,I)perylene	191242	1.60E-06	1.60E-09	AVAQMD Default	0.000000	3.17E-09	0.000014	1.60E-09
Benzo(k)fluoranthene	205823	1.80E-06	1.80E-09	AVAQMD Default	0.000000	3.56E-09	0.000016	1.80E-09
Beryllium	7440417	1.20E-05	1.20E-08	AVAQMD Default	0.000000	2.38E-08	0.000105	1.20E-08
Cadmium	7440439	1.10E-03	1.10E-06	AVAQMD Default	0.000000	2.18E-06	0.009636	1.10E-06
Chromium (total)	7440473	1.40E-03	1.40E-06	AVAQMD Default	0.000000	2.77E-06	0.012264	1.40E-06
Chrysene	218019	1.80E-06	1.80E-09	AVAQMD Default	0.000000	3.56E-09	0.000016	1.80E-09
Cobalt	7440484	8.40E-05	8.40E-08	AVAQMD Default	0.000000	1.66E-07	0.000736	8.40E-08
Copper	7440508	8.50E-04	8.50E-07	AVAQMD Default	0.000000	1.68E-06	0.007446	8.50E-07
Dibenzo(a,h)anthracene	53703	1.60E-06	1.60E-09	AVAQMD Default	0.000000	3.17E-09	0.000014	1.60E-09
Dichlorobenzene	25321226	1.20E-03	1.20E-06	AVAQMD Default	0.000000	2.38E-06	0.010512	1.20E-06
7,12-Dimethylbenz(a)anthracene	57976	1.60E-05	1.60E-08	AVAQMD Default	0.000000	3.17E-08	0.000140	1.60E-08
Ethyl Benzene	100414	9.50E-03	9.50E-06	AVAQMD Default	0.000000	1.88E-05	0.083220	9.50E-06
Fluoranthene	206440	3.00E-06	3.00E-09	AVAQMD Default	0.000000	5.94E-09	0.000026	3.00E-09
Fluorene	86737	2.80E-06	2.80E-09	AVAQMD Default	0.000000	5.54E-09	0.000025	2.80E-09
Formaldehyde	50000	1.70E-02	1.70E-05	AVAQMD Default	0.000000	3.37E-05	0.148920	1.70E-05
Hexane	110543	6.30E-03	6.30E-06	AVAQMD Default	0.000000	1.25E-05	0.055188	6.30E-06
Indeno(1,2,3-cd)pyrene	193395	1.80E-06	1.80E-09	AVAQMD Default	0.000000	3.56E-09	0.000016	1.80E-09
Lead	7439921	5.00E-04	5.00E-07	AVAQMD Default	0.000000	9.90E-07	0.004380	5.00E-07
Manganese	7439965	3.80E-04	3.80E-07	AVAQMD Default	0.000000	7.52E-07	0.003329	3.80E-07
Mercury	7439976	2.60E-04	2.60E-07	AVAQMD Default	0.000000	5.15E-07	0.002278	2.60E-07
3-methylchloranthrene	56495	1.80E-06	1.80E-09	AVAQMD Default	0.000000	3.56E-09	0.000016	1.80E-09
2-Methylnaphthalene	91576	2.40E-05	2.40E-08	AVAQMD Default	0.000000	4.75E-08	0.000210	2.40E-08
Molybdenum	7439987	1.10E-03	1.10E-06	AVAQMD Default	0.000000	2.18E-06	0.009636	1.10E-06
Naphthalene	91203	3.00E-04	3.00E-07	AVAQMD Default	0.000000	5.94E-07	0.002628	3.00E-07
Nickel	7440020	2.10E-03	2.10E-06	AVAQMD Default	0.000000	4.16E-06	0.018396	2.10E-06
PAH's	1150	4.00E-04	4.00E-07	AVAQMD Default	0.000000	7.92E-07	0.003504	4.00E-07
Phenanathrene	85018	1.70E-05	1.70E-08	AVAQMD Default	0.000000	3.37E-08	0.000149	1.70E-08
Pyrene	129000	5.00E-06	5.00E-09	AVAQMD Default	0.000000	9.90E-09	0.000044	5.00E-09
Selenium	7782492	2.40E-05	2.40E-08	AVAQMD Default	0.000000	4.75E-08	0.000210	2.40E-08
Toluene	108883	3.66E-02	3.66E-05	AVAQMD Default	0.000000	7.25E-05	0.320616	3.66E-05
Vanadium	7440622	2.30E-03	2.30E-06	AVAQMD Default	0.000000	4.55E-06	0.020148	2.30E-06
Xylenes	1210	2.72E-02	2.72E-05	AVAQMD Default	0.000000	5.39E-05	0.238272	2.72E-05
Zinc	7440666	2.90E-02	2.90E-05	AVAQMD Default	0.000000	5.74E-05	0.254040	2.90E-05

APPENDIX A

MANUFACTURERS DATA

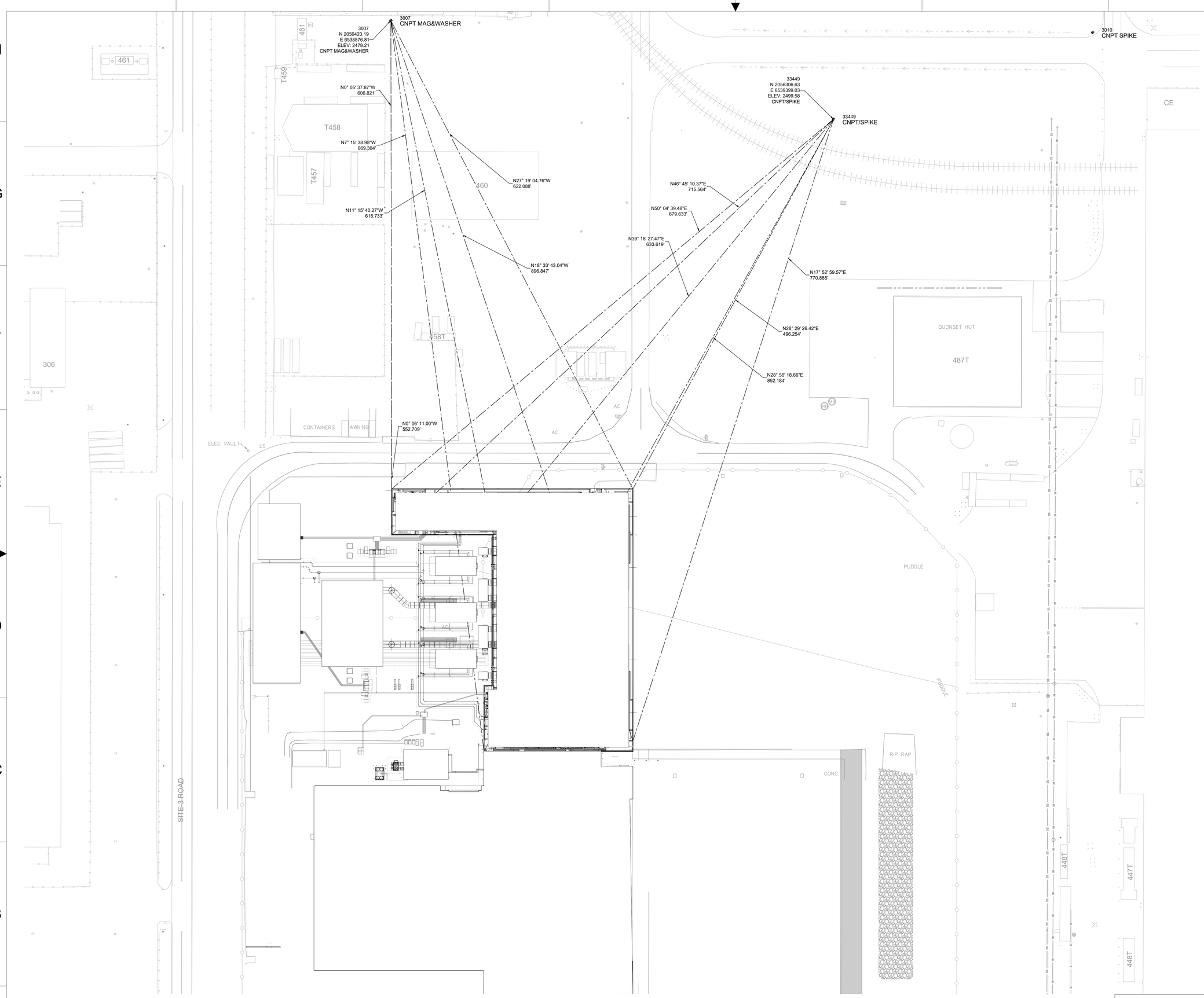

HORIZONTAL CONTROL PLAN

0 20' 40' 80'
SCALE IN FEET

N

PRELIMINARY
NOT FOR CONSTRUCTION

THIS DOCUMENT IS RELEASED FOR THE PURPOSE OF REVIEW UNDER THE AUTHORITY OF NAME X. LAST NAME SEAL NO. MONTH / DAY / YEAR
IT IS NOT TO BE USED FOR CONSTRUCTION PURPOSES.

REVISIONS

REV	DESCRIPTION	DATE	APPROVED
A	ISSUED FOR 30% REVIEW	03/10/2023	JD
B	ISSUED FOR 60% REVIEW	06/22/2023	JD

BURNS McDONNELL
140 S. STATE COLLEGE BLVD. SUITE 100 BREA, CA 92821
BMCD LICENSE NO. 755238

APPROVED BY	NORTHROP GRUMMAN ENVIRONMENTAL HEALTH AND SAFETY	DATE
APPROVED BY	NORTHROP GRUMMAN FIRE DEPARTMENT	DATE
APPROVED BY	NORTHROP GRUMMAN SECURITY	DATE
APPROVED BY		DATE
APPROVED BY		DATE
APPROVED BY		DATE
APPROVED BY		DATE
	NORTHROP/GRUMMAN BUSINESS MANAGEMENT DEPT.	DATE
	NORTHROP/GRUMMAN FACILITIES ENGINEER MANAGER	DATE
PREPARED BY	ENGINEER	DATE
RECOMMENDED BY	NORTHROP/GRUMMAN FACILITY MANAGER - LESSEE	DATE
APPROVED BY	LESSOR SUPERVISING ENGINEER	DATE
APPROVED BY	LESSOR FIRE PROTECTION ENGINEER	DATE
APPROVED BY	LESSOR SAFETY SPECIALIST	DATE

UNCLASSIFIED

NOTE: IF THIS SHEET IS LESS THAN 34"x44", THIS SHEET HAS BEEN REDUCED. REDUCE THE SCALE TO THE DRAWING ACCORDINGLY.

NORTHROP GRUMMAN
NORTHROP GRUMMAN CORP.
3520 EAST AVENUE "M"
PALMDALE, CALIFORNIA 93550

PLANT 42	BUILDING NO. 421	AREA -
TITLE **B421 PHASE 3 COATING HANGAR** HORIZONTAL CONTROL PLAN		
SCALE AS INDICATED	SHEET 2 OF 15	DATE 06/22/2023
DRAWN F. ZARGAR	DESIGNED N. BUSANTE	CHECKED J. DYE
PROJECT NO. 148039		DRAWING NO. C-010

6/15/2023 4:23:24 PM , Z:\Clients\GFS\northropgrum\148039_b421ph3\Design\CADD\Civil\Sheets\148039_C-010

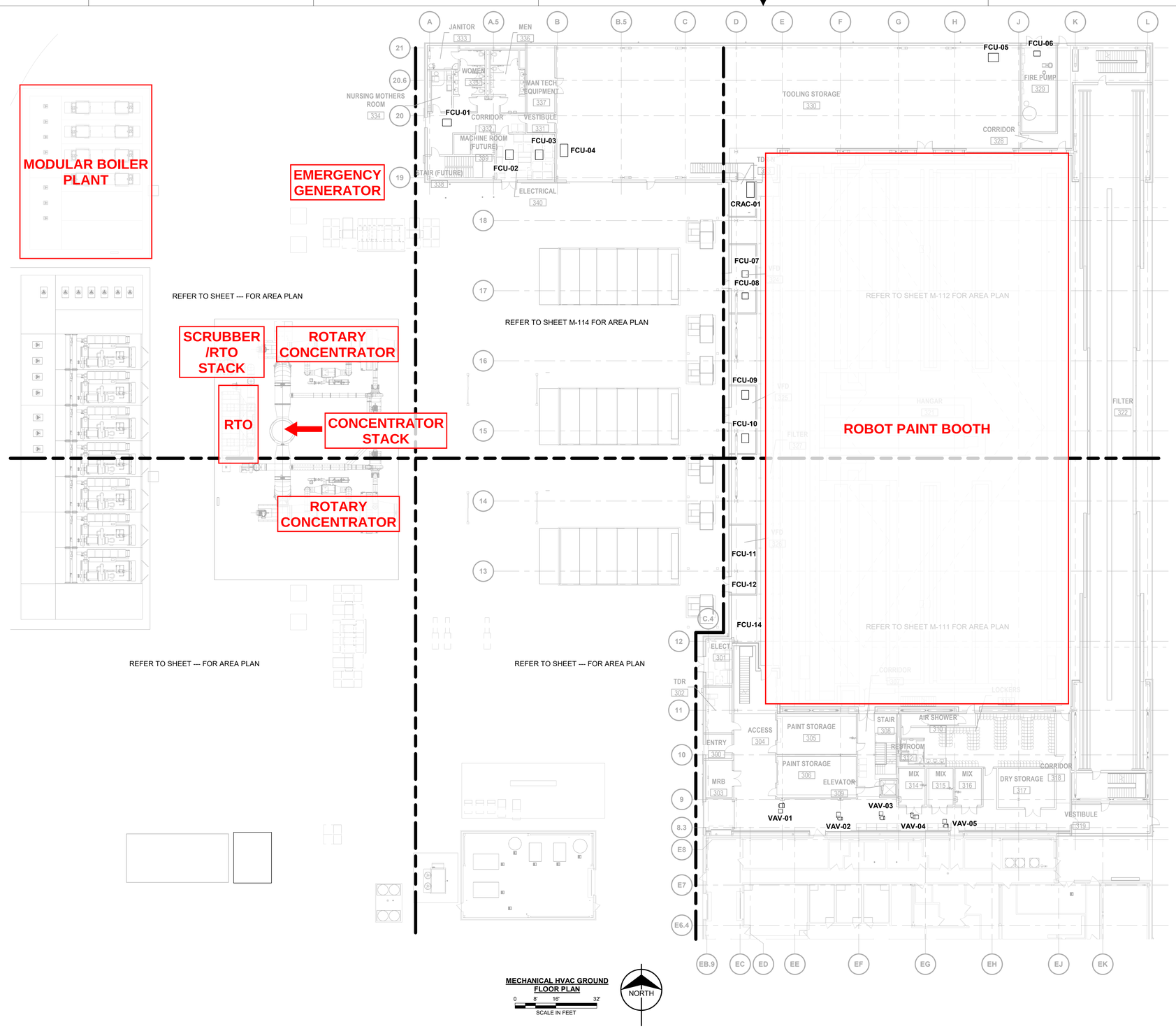

MECHANICAL HVAC GROUND FLOOR PLAN

0 8' 16' 32'

SCALE IN FEET

NOTES:

1. FOR GENERAL NOTES, SYMBOLS, AND ABBREVIATIONS SEE DRAWING M-001.

KEYED NOTES: (#)

1. XXX.

PRELIMINARY
NOT FOR CONSTRUCTION
06/23/2023

THIS DOCUMENT IS RELEASED FOR THE PURPOSE OF REVIEW UNDER THE AUTHORITY OF

IT IS NOT TO BE USED FOR CONSTRUCTION PURPOSES.

REVISIONS

REV	DESCRIPTION	DATE	APPROVED
A	ISSUED FOR 30% REVIEW.	03/10/2023	ERL
B	ISSUED FOR 60% REVIEW.	06/23/2023	ERL

BURNS McDONNELL
140 S. STATE COLLEGE BLVD. SUITE 100 BREA, CA 92821
BMCD LICENSE NO. 755238

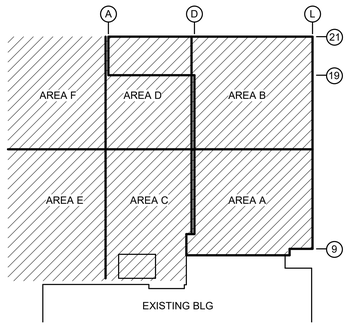

KEY PLAN
NOT TO SCALE

APPROVED BY	NORTHROP GRUMMAN ENVIRONMENTAL HEALTH AND SAFETY	DATE
APPROVED BY	NORTHROP GRUMMAN FIRE DEPARTMENT	DATE
APPROVED BY	NORTHROP GRUMMAN SECURITY	DATE
APPROVED BY		DATE
APPROVED BY		DATE
APPROVED BY		DATE
APPROVED BY		DATE
	NORTHROP/GRUMMAN BUSINESS MANAGEMENT DEPT.	DATE
	NORTHROP/GRUMMAN FACILITIES ENGINEER MANAGER	DATE
PREPARED BY	ENGINEER	DATE
RECOMMENDED BY	NORTHROP/GRUMMAN FACILITY MANAGER - LESSEE	DATE
APPROVED BY	LESSOR SUPERVISING ENGINEER	DATE
APPROVED BY	LESSOR FIRE PROTECTION ENGINEER	DATE
APPROVED BY	LESSOR SAFETY SPECIALIST	DATE

NOTE: IF THIS SHEET IS LESS THAN 34"x44", THIS SHEET HAS BEEN REDUCED. REDUCE THE SCALE TO THE DRAWING ACCORDINGLY.

UNCLASSIFIED

NORTHROP GRUMMAN
NORTHROP GRUMMAN CORP.
3520 EAST AVENUE "M"
PALMDALE, CALIFORNIA 93550

PLANT 42	BUILDING NO. 421	AREA
TITLE B421 PHASE 3 COATING HANGAR		
MECHANICAL HVAC GROUND FLOOR PLAN		
SCALE 1/16" = 1'-0"	SHEET OF	DATE 02/20/2023
DRAWN J. KLEINOWSKI	DESIGNED J. RIDDLE	CHECKED E. LARSEN
PROJECT NO. 148039		DRAWING NO. M-110

PERMIT APPLICATION
B/421 PHASE III BOILERS

OCTOBER 2023

Prepared for:
NORTHROP GRUMMAN CORPORATION
Palmdale, California

Prepared by:
VERDANT ENVIRONMENTAL
Palmdale, California

TABLE OF CONTENTS

1

Permit Application Forms 1

2

Process Description.....2
Introduction 2
Equipment Description 2
Operating Schedule.....2

3

Emission Calculations.....3
Criteria Pollutant Emissions 3
HAP Emissions.....3

4

Rule Compliance Evaluation 4

5

Fee Evaluation.....7

TABLES

Table 1 Emission factors for NOx, VOC, CO, and SOx
Table 2 Potential to Emit NOx, VOC, CO, and SOx
Table 3 Potential to Emit PM and CO2
Table 4 Potential to Emit TACs for new B/421 Phase III boilers

FIGURES

Figure 1 Boiler Flow Diagram

APPENDICES

Appendix A Manufacturer's Data

1

PERMIT APPLICATION FORMS

Antelope Valley Air Quality Management District

2551 West Ave H, Suite 102, Lancaster, CA 93536
Phone 661.723.8070
www.avaqmd.ca.gov

Application for External Combustion Engine (boiler, etc.) Only

Please type or print

Please refer to Rule 301 for Application Filing Fee.

1. Permit to be Issued to (name of company to receive permit): Northrop Grumman Aeronautics System Corporation

1a. Federal Tax ID #: 95-1055798

2. Mailing/Billing Address (for the above company name): 3520 E Avenue M, M/S 4F

3. Facility or Business Name on License (for equipment location): Northrop Grumman Aeronautics System Corporation - Palmdale

4. Facility Address/Location of Equipment (if same as company, enter "Same"): Same

Facility UTM or Lat/Long: 425E/3830N

5. Contact Name and Title: George Jung

E-mail Address: george.jung@ngc.com

Phone and Fax #s: 661-266-5394

6. Application is hereby made for the Authority to Construct (ATC) and Permit to Operate (PTO) the following equipment:

6 MMBtu/hr natural gas fired boiler #1

7. Application is for:
☒ New Construction ☐ Modification* ☐ Change of Owner*

***For modification or change of owner:**
Current permit #: _____

8. Type of Organization (check one):
☐ Individual Owner ☐ Partnership ☒ Corporation ☐ Utility ☐ Local Agency ☐ State Agency ☐ Federal Agency

9. Distances (feet and direction to closest):
Fenceline _____ Residence _____ Business _____ School _____

10. General Nature of Business: Aircraft manufacturing

11. Principal Product: Aircraft

12. Facility Annual Throughput by Quarters (percent):

Jan-Mar	Apr-Jun	Jul-Sep	Oct-Dec
25 %	25 %	25 %	25 %

13. Expected Facility Operating Hours:

Hrs/Day	Days/Wk	Wks/Yr	Total Hrs/Yr
24	7	52	

14. Do you claim Confidentiality of Data? (If yes, state nature of data in an attachment.) ☐ Yes ☐ No

15. Machine Information:
Check One:
☒ Boiler ☐ Dryer ☐ Furnace ☐ Heater ☐ Kiln ☐ Oven ☐ Other _____

(specify): Manufacturer: _____

Model #: Cleaver Brooks Clearfire Serial #: CFCE-700-6000-125HW

Maximum heat input rating (use Higher Heating Value): 6000 MMBtu/hr or kW

Burner Manufacturer: Cleaver-Brooks Burner Model #: Integral

# of Burners: 1 Burner max heat input rating: 6000 MMBtu/hr or kW

Percent excess air (or n/a): 30% Operating temps (C or F): Av. 140 F Max. 170 F

Specify Primary Fuel (attach fuel analysis for these fuels, specifying HHV and sulfur content):
☒ Natural Gas ☐ LPG (Propane) ☐ CARB Diesel ☐ Coal* ☐ Petroleum Coke* ☐ Digester Gas*
☐ Landfill Gas* ☐ Refinery Gas* ☐ Other* (specify): _____

Max hourly primary fuel usage: 6000 Fuel units (ft^3, gal, etc.) ft^3

If secondary fuel is proposed, specify: N/A Max hourly usage: _____

Feedstock type and max process rate (specify units): _____

Antelope Valley Air Quality Management District

2551 West Ave H, Suite 102, Lancaster, CA 93536
Phone 661.723.8070
www.avaqmd.ca.gov

Application for External Combustion Engine (boiler, etc.) Only

Unit lat/long or UTM coordinates: _____

Max annual hours: 8760 Exhaust stack height (feet): 22 Inside diameter (inches) 14

16. Emissions Controls:
Check all that apply:
☒ Low NOx Burner ☐ Oxygen Trim ☐ Flue or Exhaust Gas Recirculation (FGR or EGR) ☐ Oxidation Catalyst ☐ Selective Catalytic Reduction (SCR) ☐ Selective Non-Catalytic Reduction (SNCR) ☐ Afterburner ☐ ESP ☐ Baghouse
☐ Other (specify): _____

17. Max Emissions Rates (controlled):

Pollutant	Concentration (ppmvd or gr/dscf)	Mass (pounds/hr)
1. Oxides of Nitrogen (NOx)	7 PPM	0.0509
2. Oxides of Sulfur (SOx)	1 PPM	0.0101
3. Carbon Monoxide (CO	20 PPM	0.0948
4. Total Particulates (TSP or PM30)	N/A	
5. Coarse Respirable Particulates (PM2.5)	N/A	
6. Total Organics (TOG)	N/A	
7. Volatile Organic Compounds (VOC, ROG, or NMOG)	4 PPM	0.0101

18. Dryers Only:
Check one:
☐ Centrifugal ☐ Chip ☐ Fluidized Bed ☐ Rotary ☐ Spray ☐ Other (specify): _____

19. Furnace Only:
Check one:
☐ Annealing ☐ Burnoff ☐ Calcining ☐ Crucible ☐ Cupola ☐ Diffusion ☐ Electric ☐ Forge ☐ Pot ☐ Holding
☐ Heat Treating ☐ Melting ☐ Reverbatory ☐ Rotary ☐ Sweating ☐ Oxide Growth

20. Oven Only:
Check one:
☐ Bakery ☐ Baking ☐ Curing ☐ Drying ☐ Fluidized Bed ☐ Stripping ☐ Solder Reflow
☐ Roasting, specify type: _____

Firing Method: ☐ Direct ☐ Indirect

Signature of Responsible Official:		Official Title: Environmental
Typed or Printed Name of Responsible Official: George Jung	Phone Number: 661 266-5394	Date Signed: 10/04/2023

For District Use Only

Application #:	Invoice #:	Permit #:	Company/Facility #:

Antelope Valley Air Quality Management District
2551 West Ave H, Suite 102, Lancaster, CA 93536
Phone: 661.723.8070
www.avaqmd.ca.gov

Application for External Combustion Engine (Boiler, etc.) Only

Application Submittal Instructions

1) Submit completed application to engineering@avaqmd.ca.gov

2) Pay the corresponding application fee via check or credit card

Payment by check:

Make check payable to: Antelope Valley AQMD
Mail the check with a copy of this completed application to:
Antelope Valley AQMD 2551 West Ave H, Suite 102, Lancaster, CA 93536

Payment by credit card:

Pay online at our website: http://www.avaqmd.ca.gov
Click "Pay Fees"
Please note a surcharge applies for all credit card payments.

If payment is made online via credit card, please email the receipt to engineering@avaqmd.ca.gov.

Should you have any additional questions, please, do not hesitate to contact the permitting division at 661-723-8070, or via email at engineering@avaqmd.ca.gov

Antelope Valley Air Quality Management District

2551 West Ave H, Suite 102, Lancaster, CA 93536
Phone 661.723.8070
www.avaqmd.ca.gov

Application for External Combustion Engine (boiler, etc.) Only

Please type or print

Please refer to Rule 301 for Application Filing Fee.

1. Permit to be Issued to (name of company to receive permit): Northrop Grumman Aeronautics System Corporation

1a. Federal Tax ID #: 95-1055798

2. Mailing/Billing Address (for the above company name): 3520 E Avenue M, M/S 4F

3. Facility or Business Name on License (for equipment location): Northrop Grumman Aeronautics System Corporation - Palmdale

4. Facility Address/Location of Equipment (if same as company, enter "Same"): Same

Facility UTM or Lat/Long: 425E/3830N

5. Contact Name and Title: George Jung

E-mail Address: george.jung@ngc.com

Phone and Fax #s: 661-266-5394

6. Application is hereby made for the Authority to Construct (ATC) and Permit to Operate (PTO) the following equipment:

6 MMBtu/hr natural gas fired boiler #2

7. Application is for:
☒ New Construction ☐ Modification* ☐ Change of Owner*

***For modification or change of owner:**
Current permit #: _____

8. Type of Organization (check one):
☐ Individual Owner ☐ Partnership ☒ Corporation ☐ Utility ☐ Local Agency ☐ State Agency ☐ Federal Agency

9. Distances (feet and direction to closest):
Fenceline _____ Residence _____ Business _____ School _____

10. General Nature of Business: Aircraft manufacturing

11. Principal Product: Aircraft

12. Facility Annual Throughput by Quarters (percent):

Jan-Mar	Apr-Jun	Jul-Sep	Oct-Dec
25 %	25 %	25 %	25 %

13. Expected Facility Operating Hours:

Hrs/Day	Days/Wk	Wks/Yr	Total Hrs/Yr
24	7	52	

14. Do you claim Confidentiality of Data? (If yes, state nature of data in an attachment.) ☐ Yes ☐ No

15. Machine Information:
Check One:
☒ Boiler ☐ Dryer ☐ Furnace ☐ Heater ☐ Kiln ☐ Oven ☐ Other _____

(specify): Manufacturer: _____

Model #: Cleaver Brooks Clearfire Serial #: CFCE-700-6000-125HW

Maximum heat input rating (use Higher Heating Value): 6000 MMBtu/hr or kW

Burner Manufacturer: Cleaver-Brooks Burner Model #: Integral

# of Burners: 1 Burner max heat input rating: 6000 MMBtu/hr or kW

Percent excess air (or n/a): 30% Operating temps (C or F): Av. 140 F Max. 170 F

Specify Primary Fuel (attach fuel analysis for these fuels, specifying HHV and sulfur content):
☒ Natural Gas ☐ LPG (Propane) ☐ CARB Diesel ☐ Coal* ☐ Petroleum Coke* ☐ Digester Gas*
☐ Landfill Gas* ☐ Refinery Gas* ☐ Other* (specify): _____

Max hourly primary fuel usage: 6000 Fuel units (ft^3, gal, etc.) ft^3

If secondary fuel is proposed, specify: N/A Max hourly usage: _____

Feedstock type and max process rate (specify units): _____

Antelope Valley Air Quality Management District

2551 West Ave H, Suite 102, Lancaster, CA 93536
Phone 661.723.8070
www.avaqmd.ca.gov

Application for External Combustion Engine (boiler, etc.) Only

Unit lat/long or UTM coordinates: _____

Max annual hours: 8760 Exhaust stack height (feet): 22 Inside diameter (inches) 14

16. Emissions Controls:
Check all that apply:
☒ Low NOx Burner ☐ Oxygen Trim ☐ Flue or Exhaust Gas Recirculation (FGR or EGR) ☐ Oxidation Catalyst ☐ Selective Catalytic Reduction (SCR) ☐ Selective Non-Catalytic Reduction (SNCR) ☐ Afterburner ☐ ESP ☐ Baghouse
☐ Other (specify): _____

17. Max Emissions Rates (controlled):

Pollutant	Concentration (ppmvd or gr/dscf)	Mass (pounds/hr)
1. Oxides of Nitrogen (NOx)	7 PPM	0.0509
2. Oxides of Sulfur (SOx)	1 PPM	0.0101
3. Carbon Monoxide (CO	20 PPM	0.0948
4. Total Particulates (TSP or PM30)	N/A	
5. Coarse Respirable Particulates (PM2.5)	N/A	
6. Total Organics (TOG)	N/A	
7. Volatile Organic Compounds (VOC, ROG, or NMOG)	4 PPM	0.0101

18. Dryers Only:
Check one:
☐ Centrifugal ☐ Chip ☐ Fluidized Bed ☐ Rotary ☐ Spray ☐ Other (specify): _____

19. Furnace Only:
Check one:
☐ Annealing ☐ Burnoff ☐ Calcining ☐ Crucible ☐ Cupola ☐ Diffusion ☐ Electric ☐ Forge ☐ Pot ☐ Holding
☐ Heat Treating ☐ Melting ☐ Reverbatory ☐ Rotary ☐ Sweating ☐ Oxide Growth

20. Oven Only:
Check one:
☐ Bakery ☐ Baking ☐ Curing ☐ Drying ☐ Fluidized Bed ☐ Stripping ☐ Solder Reflow
☐ Roasting, specify type: _____

Firing Method: ☐ Direct ☐ Indirect

Signature of Responsible Official:		Official Title: Environmental
Typed or Printed Name of Responsible Official: George Jung	Phone Number: 661 266-5394	Date Signed: 10/04/2023

For District Use Only

Application #:	Invoice #:	Permit #:	Company/Facility #:

Antelope Valley Air Quality Management District

2551 West Ave H, Suite 102, Lancaster, CA 93536
Phone: 661.723.8070
www.avaqmd.ca.gov

Application for External Combustion Engine (Boiler, etc.) Only

Application Submittal Instructions

1) Submit completed application to engineering@avaqmd.ca.gov

2) Pay the corresponding application fee via check or credit card

Payment by check:

Make check payable to: Antelope Valley AQMD
Mail the check with a copy of this completed application to:
Antelope Valley AQMD 2551 West Ave H, Suite 102, Lancaster, CA 93536

Payment by credit card:

Pay online at our website: http://www.avaqmd.ca.gov
Click "Pay Fees"
Please note a surcharge applies for all credit card payments.

If payment is made online via credit card, please email the receipt to engineering@avaqmd.ca.gov.

Should you have any additional questions, please, do not hesitate to contact the permitting division at 661-723-8070, or via email at engineering@avaqmd.ca.gov

Antelope Valley Air Quality Management District

2551 West Ave H, Suite 102, Lancaster, CA 93536
Phone 661.723.8070
www.avaqmd.ca.gov

Application for External Combustion Engine (boiler, etc.) Only

Please type or print. **Please refer to Rule 301 for Application Filing Fee.**

1. Permit to be Issued to (name of company to receive permit): Northrop Grumman Aeronautics System Corporation

1a. Federal Tax ID #: 95-1055798

2. Mailing/Billing Address (for the above company name): 3520 E Avenue M, M/S 4F

3. Facility or Business Name on License (for equipment location): Northrop Grumman Aeronautics System Corporation - Palmdale

4. Facility Address/Location of Equipment (if same as company, enter "Same"): Same

Facility UTM or Lat/Long: 425E/3830N

5. Contact Name and Title: George Jung

E-mail Address: george.jung@ngc.com

Phone and Fax #[5]: 661-266-5394

6. Application is hereby made for the Authority to Construct (ATC) and Permit to Operate (PTO) the following equipment:

6 MMBtu/hr natural gas fired boiler #3

7. Application is for:
☒ New Construction ☐ Modification* ☐ Change of Owner*

***For modification or change of owner:**
Current permit #: _____

8. Type of Organization (check one):
☐ Individual Owner ☐ Partnership ☒ Corporation ☐ Utility ☐ Local Agency ☐ State Agency ☐ Federal Agency

9. Distances (feet and direction to closest):
Fenceline _____ Residence _____ Business _____ School _____

10. General Nature of Business: Aircraft manufacturing

11. Principal Product: Aircraft

12. Facility Annual Throughput by Quarters (percent):

Jan-Mar	Apr-Jun	Jul-Sep	Oct-Dec
25 %	25 %	25 %	25 %

13. Expected Facility Operating Hours:

Hrs/Day	Days/Wk	Wks/Yr	Total Hrs/Yr
24	7	52	

14. Do you claim Confidentiality of Data? (If yes, state nature of data in an attachment.) ☐ Yes ☐ No

15. Machine Information:
Check One:
☒ Boiler ☐ Dryer ☐ Furnace ☐ Heater ☐ Kiln ☐ Oven ☐ Other _____

(specify): Manufacturer: _____

Model #: Cleaver Brooks Clearfire Serial #: CFCE-700-6000-125HW

Maximum heat input rating (use Higher Heating Value): 6000 MMBtu/hr or kW

Burner Manufacturer: Cleaver-Brooks Burner Model #: Integral

# of Burners: 1 Burner max heat input rating: 6000 MMBtu/hr or kW

Percent excess air (or n/a): 30% Operating temps (C or F): Av. 140 F Max. 170 F

Specify Primary Fuel (attach fuel analysis for these fuels, specifying HHV and sulfur content):
☒ Natural Gas ☐ LPG (Propane) ☐ CARB Diesel ☐ Coal* ☐ Petroleum Coke* ☐ Digester Gas*
☐ Landfill Gas* ☐ Refinery Gas* ☐ Other* (specify): _____

Max hourly primary fuel usage: 6000 Fuel units (ft^3, gal, etc.) ft^3

If secondary fuel is proposed, specify: N/A Max hourly usage: _____

Feedstock type and max process rate (specify units): _____

Antelope Valley Air Quality Management District

2551 West Ave H, Suite 102, Lancaster, CA 93536
Phone 661.723.8070
www.avaqmd.ca.gov

Application for External Combustion Engine (boiler, etc.) Only

Unit lat/long or UTM coordinates: _____

Max annual hours: 8760 Exhaust stack height (feet): 22 Inside diameter (inches) 14

16. Emissions Controls:
Check all that apply:
☒ Low NOx Burner ☐ Oxygen Trim ☐ Flue or Exhaust Gas Recirculation (FGR or EGR) ☐ Oxidation Catalyst ☐ Selective Catalytic Reduction (SCR) ☐ Selective Non-Catalytic Reduction (SNCR) ☐ Afterburner ☐ ESP ☐ Baghouse
☐ Other (specify): _____

17. Max Emissions Rates (controlled):

Pollutant	Concentration (ppmvd or gr/dscf)	Mass (pounds/hr)
1. Oxides of Nitrogen (NOx)	7 PPM	0.0509
2. Oxides of Sulfur (SOx)	1 PPM	0.0101
3. Carbon Monoxide (CO	20 PPM	0.0948
4. Total Particulates (TSP or PM30)	N/A	
5. Coarse Respirable Particulates (PM2.5)	N/A	
6. Total Organics (TOG)	N/A	
7. Volatile Organic Compounds (VOC, ROG, or NMOG)	4 PPM	0.0101

18. Dryers Only:
Check one:
☐ Centrifugal ☐ Chip ☐ Fluidized Bed ☐ Rotary ☐ Spray ☐ Other (specify): _____

19. Furnace Only:
Check one:
☐ Annealing ☐ Burnoff ☐ Calcining ☐ Crucible ☐ Cupola ☐ Diffusion ☐ Electric ☐ Forge ☐ Pot ☐ Holding
☐ Heat Treating ☐ Melting ☐ Reverbatory ☐ Rotary ☐ Sweating ☐ Oxide Growth

20. Oven Only:
Check one:
☐ Bakery ☐ Baking ☐ Curing ☐ Drying ☐ Fluidized Bed ☐ Stripping ☐ Solder Reflow
☐ Roasting, specify type: _____

Firing Method: ☐ Direct ☒ Indirect

Signature of Responsible Official:		Official Title: Environmental
Typed or Printed Name of Responsible Official: George Jung	Phone Number: 661 266-5394	Date Signed: 10/04/2023

For District Use Only

Application #:	Invoice #:	Permit #:	Company/Facility #:

Antelope Valley Air Quality Management District

2551 West Ave H, Suite 102, Lancaster, CA 93536
Phone: 661.723.8070
www.avaqmd.ca.gov

Application for External Combustion Engine (Boiler, etc.) Only

Application Submittal Instructions

1) Submit completed application to engineering@avaqmd.ca.gov

2) Pay the corresponding application fee via check or credit card

Payment by check:

Make check payable to: Antelope Valley AQMD
Mail the check with a copy of this completed application to:
Antelope Valley AQMD 2551 West Ave H, Suite 102, Lancaster, CA 93536

Payment by credit card:

Pay online at our website: http://www.avaqmd.ca.gov
Click "Pay Fees"
Please note a surcharge applies for all credit card payments.

If payment is made online via credit card, please email the receipt to engineering@avaqmd.ca.gov.

Should you have any additional questions, please, do not hesitate to contact the permitting division at 661-723-8070, or via email at engineering@avaqmd.ca.gov

Antelope Valley Air Quality Management District

2551 West Ave H, Suite 102, Lancaster, CA 93536
Phone 661.723.8070
www.avaqmd.ca.gov

Application for External Combustion Engine (boiler, etc.) Only

Please type or print. **Please refer to Rule 301 for Application Filing Fee.**

1. Permit to be Issued to (name of company to receive permit): Northrop Grumman Aeronautics System Corporation

1a. Federal Tax ID #: 95-1055798

2. Mailing/Billing Address (for the above company name): 3520 E Avenue M, M/S 4F

3. Facility or Business Name on License (for equipment location): Northrop Grumman Aeronautics System Corporation - Palmdale

4. Facility Address/Location of Equipment (if same as company, enter "Same"): Same

Facility UTM or Lat/Long: 425E/3830N

5. Contact Name and Title: George Jung

E-mail Address: george.jung@ngc.com

Phone and Fax #s: 661-266-5394

6. Application is hereby made for the Authority to Construct (ATC) and Permit to Operate (PTO) the following equipment:

6 MMBtu/hr natural gas fired boiler #4

7. Application is for:
☒ New Construction ☐ Modification* ☐ Change of Owner*

***For modification or change of owner:**
Current permit #: _____

8. Type of Organization (check one):
☐ Individual Owner ☐ Partnership ☒ Corporation ☐ Utility ☐ Local Agency ☐ State Agency ☐ Federal Agency

9. Distances (feet and direction to closest):
Fenceline _____ Residence _____ Business _____ School _____

10. General Nature of Business: Aircraft manufacturing

11. Principal Product: Aircraft

12. Facility Annual Throughput by Quarters (percent):

Jan-Mar	Apr-Jun	Jul-Sep	Oct-Dec
25 %	25 %	25 %	25 %

13. Expected Facility Operating Hours:

Hrs/Day	Days/Wk	Wks/Yr	Total Hrs/Yr
24	7	52	

14. Do you claim Confidentiality of Data? (If yes, state nature of data in an attachment.) ☐ Yes ☐ No

15. Machine Information:
Check One:
☒ Boiler ☐ Dryer ☐ Furnace ☐ Heater ☐ Kiln ☐ Oven ☐ Other _____

(specify): Manufacturer: _____

Model #: Cleaver Brooks Clearfire Serial #: CFCE-700-6000-125HW

Maximum heat input rating (use Higher Heating Value): 6000 MMBtu/hr or kW

Burner Manufacturer: Cleaver-Brooks Burner Model #: Integral

# of Burners: 1 Burner max heat input rating: 6000 MMBtu/hr or kW

Percent excess air (or n/a): 30% Operating temps (C or F): Av. 140 F Max. 170 F

Specify Primary Fuel (attach fuel analysis for these fuels, specifying HHV and sulfur content):
☒ Natural Gas ☐ LPG (Propane) ☐ CARB Diesel ☐ Coal* ☐ Petroleum Coke* ☐ Digester Gas*
☐ Landfill Gas* ☐ Refinery Gas* ☐ Other* (specify): _____

Max hourly primary fuel usage: 6000 Fuel units (ft^3, gal, etc.) ft^3

If secondary fuel is proposed, specify: N/A Max hourly usage: _____

Feedstock type and max process rate (specify units): _____

Antelope Valley Air Quality Management District

2551 West Ave H, Suite 102, Lancaster, CA 93536
Phone 661.723.8070
www.avaqmd.ca.gov

Application for External Combustion Engine (boiler, etc.) Only

Unit lat/long or UTM coordinates: _____

Max annual hours: 8760 Exhaust stack height (feet): 22 Inside diameter (inches) 14

16. Emissions Controls:
Check all that apply:
☒ Low NOx Burner ☐ Oxygen Trim ☐ Flue or Exhaust Gas Recirculation (FGR or EGR) ☐ Oxidation Catalyst ☐ Selective Catalytic Reduction (SCR) ☐ Selective Non-Catalytic Reduction (SNCR) ☐ Afterburner ☐ ESP ☐ Baghouse
☐ Other (specify) _____

17. Max Emissions Rates (controlled):

Pollutant	Concentration (ppmvd or gr/dscf)	Mass (pounds/hr)
1. Oxides of Nitrogen (NOx)	7 PPM	0.0509
2. Oxides of Sulfur (SOx)	1 PPM	0.0101
3. Carbon Monoxide (CO	20 PPM	0.0948
4. Total Particulates (TSP or PM30)	N/A	
5. Coarse Respirable Particulates (PM2.5)	N/A	
6. Total Organics (TOG)	N/A	
7. Volatile Organic Compounds (VOC, ROG, or NMOG)	4 PPM	0.0101

18. Dryers Only:
Check one:
☐ Centrifugal ☐ Chip ☐ Fluidized Bed ☐ Rotary ☐ Spray ☐ Other (specify): _____

19. Furnace Only:
Check one:
☐ Annealing ☐ Burnoff ☐ Calcining ☐ Crucible ☐ Cupola ☐ Diffusion ☐ Electric ☐ Forge ☐ Pot ☐ Holding
☐ Heat Treating ☐ Melting ☐ Reverbatory ☐ Rotary ☐ Sweating ☐ Oxide Growth

20. Oven Only:
Check one:
☐ Bakery ☐ Baking ☐ Curing ☐ Drying ☐ Fluidized Bed ☐ Stripping ☐ Solder Reflow
☐ Roasting, specify type: _____

Firing Method: ☐ Direct ☐ Indirect

Signature of Responsible Official:		Official Title: Environmental
Typed or Printed Name of Responsible Official: George Jung	Phone Number: 661 266-5394	Date Signed: 10/04/2023

For District Use Only

Application #:	Invoice #:	Permit #:	Company/Facility #:

Antelope Valley Air Quality Management District

2551 West Ave H, Suite 102, Lancaster, CA 93536
Phone: 661.723.8070
www.avaqmd.ca.gov

Application for External Combustion Engine (Boiler, etc.) Only

Application Submittal Instructions

1) Submit completed application to engineering@avaqmd.ca.gov

2) Pay the corresponding application fee via check or credit card

Payment by check:

Make check payable to: Antelope Valley AQMD
Mail the check with a copy of this completed application to:
Antelope Valley AQMD 2551 West Ave H, Suite 102, Lancaster, CA 93536

Payment by credit card:

Pay online at our website: http://www.avaqmd.ca.gov
Click "Pay Fees"
Please note a surcharge applies for all credit card payments.

If payment is made online via credit card, please email the receipt to engineering@avaqmd.ca.gov.

Should you have any additional questions, please, do not hesitate to contact the permitting division at 661-723-8070, or via email at engineering@avaqmd.ca.gov

Antelope Valley Air Quality Management District

2551 West Ave H, Suite 102, Lancaster, CA 93536
Phone 661.723.8070
www.avaqmd.ca.gov

Application for External Combustion Engine (boiler, etc.) Only

Please type or print. **Please refer to Rule 301 for Application Filing Fee.**

1. Permit to be Issued to (name of company to receive permit):
Northrop Grumman Aeronautics System Corporation

1a. Federal Tax ID #: 95-1055798

2. Mailing/Billing Address (for the above company name):
3520 E Avenue M, M/S 4F

3. Facility or Business Name on License (for equipment location):
Northrop Grumman Aeronautics System Corporation - Palmdale

4. Facility Address/Location of Equipment (if same as company, enter "Same"):
Same

Facility UTM or Lat/Long: 425E/3830N

5. Contact Name and Title: George Jung

E-mail Address: george.jung@ngc.com

Phone and Fax #s: 661-266-5394

6. Application is hereby made for the Authority to Construct (ATC) and Permit to Operate (PTO) the following equipment:
6 MMBtu/hr natural gas fired boiler #5

7. Application is for:
☒ New Construction ☐ Modification* ☐ Change of Owner*

***For modification or change of owner:**
Current permit #: _____

8. Type of Organization (check one):
☐ Individual Owner ☐ Partnership ☒ Corporation ☐ Utility ☐ Local Agency ☐ State Agency ☐ Federal Agency

9. Distances (feet and direction to closest):
Fenceline _____ Residence _____ Business _____ School _____

10. General Nature of Business:
Aircraft manufacturing

11. Principal Product:
Aircraft

12. Facility Annual Throughput by Quarters (percent):

Jan-Mar	Apr-Jun	Jul-Sep	Oct-Dec
25 %	25 %	25 %	25 %

13. Expected Facility Operating Hours:

Hrs/Day	Days/Wk	Wks/Yr	Total Hrs/Yr
24	7	52	

14. Do you claim Confidentiality of Data? (If yes, state nature of data in an attachment.) ☐ Yes ☐ No

15. Machine Information:
Check One:
☒ Boiler ☐ Dryer ☐ Furnace ☐ Heater ☐ Kiln ☐ Oven ☐ Other _____

(specify): Manufacturer: _____

Model #: Cleaver Brooks Clearfire Serial #: CFCE-700-6000-125HW

Maximum heat input rating (use Higher Heating Value): 6000 MMBtu/hr or kW

Burner Manufacturer: Cleaver-Brooks Burner Model #: Integral

# of Burners: 1 Burner max heat input rating: 6000 MMBtu/hr or kW

Percent excess air (or n/a): 30% Operating temps (C or F): Av. 140 F Max. 170 F

Specify Primary Fuel (attach fuel analysis for these fuels, specifying HHV and sulfur content):
☒ Natural Gas ☐ LPG (Propane) ☐ CARB Diesel ☐ Coal* ☐ Petroleum Coke* ☐ Digester Gas*
☐ Landfill Gas* ☐ Refinery Gas* ☐ Other* (specify): _____

Max hourly primary fuel usage: 6000 Fuel units (ft^3, gal, etc.) ft^3

If secondary fuel is proposed, specify: N/A Max hourly usage: _____

Feedstock type and max process rate (specify units): _____

Antelope Valley Air Quality Management District

2551 West Ave H, Suite 102, Lancaster, CA 93536
Phone 661.723.8070
www.avaqmd.ca.gov

Application for External Combustion Engine (boiler, etc.) Only

Unit lat/long or UTM coordinates: _____

Max annual hours: 8760 Exhaust stack height (feet): 22 Inside diameter (inches) 14

16. Emissions Controls:
Check all that apply:
☒ Low NOx Burner ☐ Oxygen Trim ☐ Flue or Exhaust Gas Recirculation (FGR or EGR) ☐ Oxidation Catalyst ☐ Selective Catalytic Reduction (SCR) ☐ Selective Non-Catalytic Reduction (SNCR) ☐ Afterburner ☐ ESP ☐ Baghouse
☐ Other (specify): _____

17. Max Emissions Rates (controlled):

Pollutant	Concentration (ppmvd or gr/dscf)	Mass (pounds/hr)
1. Oxides of Nitrogen (NOx)	7 PPM	0.0509
2. Oxides of Sulfur (SOx)	1 PPM	0.0101
3. Carbon Monoxide (CO	20 PPM	0.0948
4. Total Particulates (TSP or PM30)	N/A	
5. Coarse Respirable Particulates (PM2.5)	N/A	
6. Total Organics (TOG)	N/A	
7. Volatile Organic Compounds (VOC, ROG, or NMOG)	4 PPM	0.0101

18. Dryers Only:
Check one:
☐ Centrifugal ☐ Chip ☐ Fluidized Bed ☐ Rotary ☐ Spray ☐ Other (specify): _____

19. Furnace Only:
Check one:
☐ Annealing ☐ Burnoff ☐ Calcining ☐ Crucible ☐ Cupola ☐ Diffusion ☐ Electric ☐ Forge ☐ Pot ☐ Holding
☐ Heat Treating ☐ Melting ☐ Reverbatory ☐ Rotary ☐ Sweating ☐ Oxide Growth

20. Oven Only:
Check one:
☐ Bakery ☐ Baking ☐ Curing ☐ Drying ☐ Fluidized Bed ☐ Stripping ☐ Solder Reflow
☐ Roasting, specify type: _____

Firing Method: ☐ Direct ☐ Indirect

Signature of Responsible Official:		Official Title: Environmental
Typed or Printed Name of Responsible Official: George Jung	Phone Number: 661 266-5394	Date Signed: 10/04/2023

For District Use Only

Application #:	Invoice #:	Permit #:	Company/Facility #:

Antelope Valley Air Quality Management District

2551 West Ave H, Suite 102, Lancaster, CA 93536
Phone: 661.723.8070
www.avaqmd.ca.gov

Application for External Combustion Engine (Boiler, etc.) Only

Application Submittal Instructions

1) Submit completed application to engineering@avaqmd.ca.gov

2) Pay the corresponding application fee via check or credit card

Payment by check:

Make check payable to: Antelope Valley AQMD
Mail the check with a copy of this completed application to:
Antelope Valley AQMD 2551 West Ave H, Suite 102, Lancaster, CA 93536

Payment by credit card:

Pay online at our website: http://www.avaqmd.ca.gov
Click "Pay Fees"
Please note a surcharge applies for all credit card payments.

If payment is made online via credit card, please email the receipt to engineering@avaqmd.ca.gov.

Should you have any additional questions, please, do not hesitate to contact the permitting division at 661-723-8070, or via email at engineering@avaqmd.ca.gov

Antelope Valley Air Quality Management District

2551 West Ave H, Suite 102, Lancaster, CA 93536
Phone 661.723.8070
www.avaqmd.ca.gov

Application for External Combustion Engine (boiler, etc.) Only

Please type or print. **Please refer to Rule 301 for Application Filing Fee.**

1. Permit to be Issued to (name of company to receive permit):
Northrop Grumman Aeronautics System Corporation

1a. Federal Tax ID #: 95-1055798

2. Mailing/Billing Address (for the above company name):
3520 E Avenue M, M/S 4F

3. Facility or Business Name on License (for equipment location):
Northrop Grumman Aeronautics System Corporation - Palmdale

4. Facility Address/Location of Equipment (if same as company, enter "Same"):
Same

Facility UTM or Lat/Long: 425E/3830N

5. Contact Name and Title: George Jung

E-mail Address: george.jung@ngc.com

Phone and Fax #s: 661-266-5394

6. Application is hereby made for the Authority to Construct (ATC) and Permit to Operate (PTO) the following equipment:
6 MMBtu/hr natural gas fired boiler #6

7. Application is for:
☒ New Construction ☐ Modification* ☐ Change of Owner*

***For modification or change of owner:**
Current permit #: _____

8. Type of Organization (check one):
☐ Individual Owner ☐ Partnership ☒ Corporation ☐ Utility ☐ Local Agency ☐ State Agency ☐ Federal Agency

9. Distances (feet and direction to closest):
Fenceline _____ Residence _____ Business _____ School _____

10. General Nature of Business:
Aircraft manufacturing

11. Principal Product:
Aircraft

12. Facility Annual Throughput by Quarters (percent):

Jan-Mar	Apr-Jun	Jul-Sep	Oct-Dec
25 %	25 %	25 %	25 %

13. Expected Facility Operating Hours:

Hrs/Day	Days/Wk	Wks/Yr	Total Hrs/Yr
24	7	52	

14. Do you claim Confidentiality of Data? (If yes, state nature of data in an attachment.) ☐ Yes ☐ No

15. Machine Information:
Check One:
☒ Boiler ☐ Dryer ☐ Furnace ☐ Heater ☐ Kiln ☐ Oven ☐ Other _____

(specify): Manufacturer: _____

Model #: Cleaver Brooks Clearfire Serial #: CFCE-700-6000-125HW

Maximum heat input rating (use Higher Heating Value): 6000 MMBtu/hr or kW

Burner Manufacturer: Cleaver-Brooks Burner Model #: Integral

# of Burners: 1 Burner max heat input rating: 6000 MMBtu/hr or kW

Percent excess air (or n/a): 30% Operating temps (C or F): Av. 140 F Max. 170 F

Specify Primary Fuel (attach fuel analysis for these fuels, specifying HHV and sulfur content):
☒ Natural Gas ☐ LPG (Propane) ☐ CARB Diesel ☐ Coal* ☐ Petroleum Coke* ☐ Digester Gas*
☐ Landfill Gas* ☐ Refinery Gas* ☐ Other* (specify): _____

Max hourly primary fuel usage: 6000 Fuel units (ft^3, gal, etc.) ft^3

If secondary fuel is proposed, specify: N/A Max hourly usage: _____

Feedstock type and max process rate (specify units): _____

Antelope Valley Air Quality Management District

2551 West Ave H, Suite 102, Lancaster, CA 93536
Phone 661.723.8070
www.avaqmd.ca.gov

Application for External Combustion Engine (boiler, etc.) Only

Unit lat/long or UTM coordinates: _____

Max annual hours: 8760 Exhaust stack height (feet): 22 Inside diameter (inches) 14

16. Emissions Controls:
Check all that apply:
☒ Low NOx Burner ☐ Oxygen Trim ☐ Flue or Exhaust Gas Recirculation (FGR or EGR) ☐ Oxidation Catalyst ☐ Selective Catalytic Reduction (SCR) ☐ Selective Non-Catalytic Reduction (SNCR) ☐ Afterburner ☐ ESP ☐ Baghouse
☐ Other (specify) _____

17. Max Emissions Rates (controlled):

Pollutant	Concentration (ppmvd or gr/dscf)	Mass (pounds/hr)
1. Oxides of Nitrogen (NOx)	7 PPM	0.0509
2. Oxides of Sulfur (SOx)	1 PPM	0.0101
3. Carbon Monoxide (CO	20 PPM	0.0948
4. Total Particulates (TSP or PM30)	N/A	
5. Coarse Respirable Particulates (PM2.5)	N/A	
6. Total Organics (TOG)	N/A	
7. Volatile Organic Compounds (VOC, ROG, or NMOG)	4 PPM	0.0101

18. Dryers Only:
Check one:
☐ Centrifugal ☐ Chip ☐ Fluidized Bed ☐ Rotary ☐ Spray ☐ Other (specify): _____

19. Furnace Only:
Check one:
☐ Annealing ☐ Burnoff ☐ Calcining ☐ Crucible ☐ Cupola ☐ Diffusion ☐ Electric ☐ Forge ☐ Pot ☐ Holding
☐ Heat Treating ☐ Melting ☐ Reverbatory ☐ Rotary ☐ Sweating ☐ Oxide Growth

20. Oven Only:
Check one:
☐ Bakery ☐ Baking ☐ Curing ☐ Drying ☐ Fluidized Bed ☐ Stripping ☐ Solder Reflow
☐ Roasting, specify type: _____

Firing Method: ☐ Direct ☐ Indirect

Signature of Responsible Official:		Official Title: Environmental
Typed or Printed Name of Responsible Official: George Jung	Phone Number: 661 266-5394	Date Signed: 10/04/2023

For District Use Only

Application #:	Invoice #:	Permit #:	Company/Facility #:

Antelope Valley Air Quality Management District

2551 West Ave H, Suite 102, Lancaster, CA 93536
Phone: 661.723.8070
www.avaqmd.ca.gov

Application for External Combustion Engine (Boiler, etc.) Only

Application Submittal Instructions

1) Submit completed application to engineering@avaqmd.ca.gov

2) Pay the corresponding application fee via check or credit card

Payment by check:

Make check payable to: Antelope Valley AQMD
Mail the check with a copy of this completed application to:
Antelope Valley AQMD 2551 West Ave H, Suite 102, Lancaster, CA 93536

Payment by credit card:

Pay online at our website: http://www.avaqmd.ca.gov
Click "Pay Fees"
Please note a surcharge applies for all credit card payments.

If payment is made online via credit card, please email the receipt to engineering@avaqmd.ca.gov.

Should you have any additional questions, please, do not hesitate to contact the permitting division at 661-723-8070, or via email at engineering@avaqmd.ca.gov

Antelope Valley Air Quality Management District

2551 West Ave H, Suite 102, Lancaster, CA 93536
Phone 661.723.8070
www.avaqmd.ca.gov

Application for External Combustion Engine (boiler, etc.) Only

Please type or print

Please refer to Rule 301 for Application Filing Fee.

1. Permit to be Issued to (name of company to receive permit):
Northrop Grumman Aeronautics System Corporation

1a. Federal Tax ID #:
95-1055798

2. Mailing/Billing Address (for the above company name):
3520 E Avenue M, M/S 4F

3. Facility or Business Name on License (for equipment location):
Northrop Grumman Aeronautics System Corporation - Palmdale

4. Facility Address/Location of Equipment (if same as company, enter "Same"):
Same

Facility UTM or Lat/Long:
425E/3830N

5. Contact Name and Title:
George Jung

E-mail Address:
george.jung@ngc.com

Phone and Fax #s:
661-266-5394

6. Application is hereby made for the Authority to Construct (ATC) and Permit to Operate (PTO) the following equipment:
6 MMBtu/hr natural gas fired boiler #7

7. Application is for:
☒ New Construction ☐ Modification* ☐ Change of Owner*

***For modification or change of owner:**
Current permit #: _____

8. Type of Organization (check one):
☐ Individual Owner ☐ Partnership ☒ Corporation ☐ Utility ☐ Local Agency ☐ State Agency ☐ Federal Agency

9. Distances (feet and direction to closest):
Fenceline _____ Residence _____ Business _____ School _____

10. General Nature of Business:
Aircraft manufacturing

11. Principal Product:
Aircraft

12. Facility Annual Throughput by Quarters (percent):

Jan-Mar	Apr-Jun	Jul-Sep	Oct-Dec
25 %	25 %	25 %	25 %

13. Expected Facility Operating Hours:

Hrs/Day	Days/Wk	Wks/Yr	Total Hrs/Yr
24	7	52	

14. Do you claim Confidentiality of Data? (If yes, state nature of data in an attachment.) ☐ Yes ☐ No

15. Machine Information:
Check One:
☒ Boiler ☐ Dryer ☐ Furnace ☐ Heater ☐ Kiln ☐ Oven ☐ Other _____

(specify): Manufacturer: _____

Model #: Cleaver Brooks Clearfire Serial #: CFCE-700-6000-125HW

Maximum heat input rating (use Higher Heating Value): 6000 MMBtu/hr or kW

Burner Manufacturer: Cleaver-Brooks Burner Model #: Integral

# of Burners: 1 Burner max heat input rating: 6000 MMBtu/hr or kW

Percent excess air (or n/a): 30% Operating temps (C or F): Av. 140 F Max. 170 F

Specify Primary Fuel (attach fuel analysis for these fuels, specifying HHV and sulfur content):
☒ Natural Gas ☐ LPG (Propane) ☐ CARB Diesel ☐ Coal* ☐ Petroleum Coke* ☐ Digester Gas*
☐ Landfill Gas* ☐ Refinery Gas* ☐ Other* (specify): _____

Max hourly primary fuel usage: 6000 Fuel units (ft^3, gal, etc.) ft^3

If secondary fuel is proposed, specify: N/A Max hourly usage: _____

Feedstock type and max process rate (specify units): _____

Antelope Valley Air Quality Management District

2551 West Ave H, Suite 102, Lancaster, CA 93536
Phone 661.723.8070
www.avaqmd.ca.gov

Application for External Combustion Engine (boiler, etc.) Only

Unit lat/long or UTM coordinates: _____

Max annual hours: 8760 Exhaust stack height (feet): 22 Inside diameter (inches) 14

16. Emissions Controls:
Check all that apply:
☒ Low NOx Burner ☐ Oxygen Trim ☐ Flue or Exhaust Gas Recirculation (FGR or EGR) ☐ Oxidation Catalyst ☐ Selective Catalytic Reduction (SCR) ☐ Selective Non-Catalytic Reduction (SNCR) ☐ Afterburner ☐ ESP ☐ Baghouse
☐ Other (specify) _____

17. Max Emissions Rates (controlled):

Pollutant	Concentration (ppmvd or gr/dscf)	Mass (pounds/hr)
1. Oxides of Nitrogen (NOx)	7 PPM	0.0509
2. Oxides of Sulfur (SOx)	1 PPM	0.0101
3. Carbon Monoxide (CO	20 PPM	0.0948
4. Total Particulates (TSP or PM30)	N/A	
5. Coarse Respirable Particulates (PM2.5)	N/A	
6. Total Organics (TOG)	N/A	
7. Volatile Organic Compounds (VOC, ROG, or NMOG)	4 PPM	0.0101

18. Dryers Only:
Check one:
☐ Centrifugal ☐ Chip ☐ Fluidized Bed ☐ Rotary ☐ Spray ☐ Other (specify): _____

19. Furnace Only:
Check one:
☐ Annealing ☐ Burnoff ☐ Calcining ☐ Crucible ☐ Cupola ☐ Diffusion ☐ Electric ☐ Forge ☐ Pot ☐ Holding
☐ Heat Treating ☐ Melting ☐ Reverbatory ☐ Rotary ☐ Sweating ☐ Oxide Growth

20. Oven Only:
Check one:
☐ Bakery ☐ Baking ☐ Curing ☐ Drying ☐ Fluidized Bed ☐ Stripping ☐ Solder Reflow
☐ Roasting, specify type: _____

Firing Method: ☐ Direct ☒ Indirect

Signature of Responsible Official:		Official Title: Environmental
Typed or Printed Name of Responsible Official: George Jung	Phone Number: 661 266-5394	Date Signed: 10/04/2023

For District Use Only

Application #:	Invoice #:	Permit #:	Company/Facility #:

Antelope Valley Air Quality Management District

2551 West Ave H, Suite 102, Lancaster, CA 93536
Phone: 661.723.8070
www.avaqmd.ca.gov

Application for External Combustion Engine (Boiler, etc.) Only

Application Submittal Instructions

1) Submit completed application to engineering@avaqmd.ca.gov

2) Pay the corresponding application fee via check or credit card

Payment by check:

Make check payable to: Antelope Valley AQMD
Mail the check with a copy of this completed application to:
Antelope Valley AQMD 2551 West Ave H, Suite 102, Lancaster, CA 93536

Payment by credit card:

Pay online at our website: http://www.avaqmd.ca.gov
Click "Pay Fees"
Please note a surcharge applies for all credit card payments.

If payment is made online via credit card, please email the receipt to engineering@avaqmd.ca.gov.

Should you have any additional questions, please, do not hesitate to contact the permitting division at 661-723-8070, or via email at engineering@avaqmd.ca.gov

Antelope Valley Air Quality Management District

2551 West Ave H, Suite 102, Lancaster, CA 93536
Phone 661.723.8070
www.avaqmd.ca.gov

Application for External Combustion Engine (boiler, etc.) Only

Please type or print. Please refer to Rule 301 for Application Filing Fee.

1. Permit to be Issued to (name of company to receive permit): Northrop Grumman Aeronautics System Corporation

1a. Federal Tax ID #: 95-1055798

2. Mailing/Billing Address (for the above company name): 3520 E Avenue M, M/S 4F

3. Facility or Business Name on License (for equipment location): Northrop Grumman Aeronautics System Corporation - Palmdale

4. Facility Address/Location of Equipment (if same as company, enter "Same"): Same

Facility UTM or Lat/Long: 425E/3830N

5. Contact Name and Title: George Jung

E-mail Address: george.jung@ngc.com

Phone and Fax #s: 661-266-5394

6. Application is hereby made for the Authority to Construct (ATC) and Permit to Operate (PTO) the following equipment:

6 MMBtu/hr natural gas fired boiler #8

7. Application is for:
☒ New Construction ☐ Modification* ☐ Change of Owner*

***For modification or change of owner:**
Current permit #: _____

8. Type of Organization (check one):
☐ Individual Owner ☐ Partnership ☒ Corporation ☐ Utility ☐ Local Agency ☐ State Agency ☐ Federal Agency

9. Distances (feet and direction to closest):
Fenceline _____ Residence _____ Business _____ School _____

10. General Nature of Business: Aircraft manufacturing

11. Principal Product: Aircraft

12. Facility Annual Throughput by Quarters (percent):

Jan-Mar	Apr-Jun	Jul-Sep	Oct-Dec
25 %	25 %	25 %	25 %

13. Expected Facility Operating Hours:

Hrs/Day	Days/Wk	Wks/Yr	Total Hrs/Yr
24	7	52	

14. Do you claim Confidentiality of Data? (If yes, state nature of data in an attachment.) ☐ Yes ☐ No

15. Machine Information:
Check One:
☒ Boiler ☐ Dryer ☐ Furnace ☐ Heater ☐ Kiln ☐ Oven ☐ Other _____

(specify): Manufacturer: _____

Model #: Cleaver Brooks Clearfire Serial #: CFCE-700-6000-125HW

Maximum heat input rating (use Higher Heating Value): 6000 MMBtu/hr or kW

Burner Manufacturer: Cleaver-Brooks Burner Model #: Integral

# of Burners: 1 Burner max heat input rating: 6000 MMBtu/hr or kW

Percent excess air (or n/a): 30% Operating temps (C or F): Av. 140 F Max. 170 F

Specify Primary Fuel (attach fuel analysis for these fuels, specifying HHV and sulfur content):
☒ Natural Gas ☐ LPG (Propane) ☐ CARB Diesel ☐ Coal* ☐ Petroleum Coke* ☐ Digester Gas*
☐ Landfill Gas* ☐ Refinery Gas* ☐ Other* (specify): _____

Max hourly primary fuel usage: 6000 Fuel units (ft^3, gal, etc.) ft^3

If secondary fuel is proposed, specify: N/A Max hourly usage: _____

Feedstock type and max process rate (specify units): _____

Antelope Valley Air Quality Management District

2551 West Ave H, Suite 102, Lancaster, CA 93536
Phone 661.723.8070
www.avaqmd.ca.gov

Application for External Combustion Engine (boiler, etc.) Only

Unit lat/long or UTM coordinates: _____

Max annual hours: 8760 Exhaust stack height (feet): 22 Inside diameter (inches) 14

16. Emissions Controls:
Check all that apply:
☒ Low NOx Burner ☐ Oxygen Trim ☐ Flue or Exhaust Gas Recirculation (FGR or EGR) ☐ Oxidation Catalyst ☐ Selective Catalytic Reduction (SCR) ☐ Selective Non-Catalytic Reduction (SNCR) ☐ Afterburner ☐ ESP ☐ Baghouse
☐ Other (specify) _____

17. Max Emissions Rates (controlled):

Pollutant	Concentration (ppmvd or gr/dscf)	Mass (pounds/hr)
1. Oxides of Nitrogen (NOx)	7 PPM	0.0509
2. Oxides of Sulfur (SOx)	1 PPM	0.0101
3. Carbon Monoxide (CO	20 PPM	0.0948
4. Total Particulates (TSP or PM30)	N/A	
5. Coarse Respirable Particulates (PM2.5)	N/A	
6. Total Organics (TOG)	N/A	
7. Volatile Organic Compounds (VOC, ROG, or NMOG)	4 PPM	0.0101

18. Dryers Only:
Check one:
☐ Centrifugal ☐ Chip ☐ Fluidized Bed ☐ Rotary ☐ Spray ☐ Other (specify): _____

19. Furnace Only:
Check one:
☐ Annealing ☐ Burnoff ☐ Calcining ☐ Crucible ☐ Cupola ☐ Diffusion ☐ Electric ☐ Forge ☐ Pot ☐ Holding
☐ Heat Treating ☐ Melting ☐ Reverbatory ☐ Rotary ☐ Sweating ☐ Oxide Growth

20. Oven Only:
Check one:
☐ Bakery ☐ Baking ☐ Curing ☐ Drying ☐ Fluidized Bed ☐ Stripping ☐ Solder Reflow
☐ Roasting, specify type: _____

Firing Method: ☐ Direct ☐ Indirect

Signature of Responsible Official:		Official Title: Environmental
Typed or Printed Name of Responsible Official: George Jung	Phone Number: 661 266-5394	Date Signed: 10/04/2023

For District Use Only

Application #:	Invoice #:	Permit #:	Company/Facility #:

Antelope Valley Air Quality Management District
2551 West Ave H, Suite 102, Lancaster, CA 93536
Phone: 661.723.8070
www.avaqmd.ca.gov

Application for External Combustion Engine (Boiler, etc.) Only

Application Submittal Instructions

1) Submit completed application to engineering@avaqmd.ca.gov

2) Pay the corresponding application fee via check or credit card

Payment by check:

Make check payable to: Antelope Valley AQMD
Mail the check with a copy of this completed application to:
Antelope Valley AQMD 2551 West Ave H, Suite 102, Lancaster, CA 93536

Payment by credit card:

Pay online at our website: http://www.avaqmd.ca.gov
Click "Pay Fees"
Please note a surcharge applies for all credit card payments.

If payment is made online via credit card, please email the receipt to engineering@avaqmd.ca.gov.

Should you have any additional questions, please, do not hesitate to contact the permitting division at 661-723-8070, or via email at engineering@avaqmd.ca.gov

2

PROCESS DESCRIPTION

INTRODUCTION

The Northrop Grumman Corporation (Northrop), AVAQMD Facility ID No. 01816, plans to install eight (8) new 6 mmBtu boilers Site 4, B-1 through B-8. The units will provide hot water and heating for the B/421 Phase III hangar HVAC.

EQUIPMENT DESCRIPTION

The proposed equipment are Cleaver Brooks Model CFCE-700-6000-125HW boilers, a packaged watertube hot water boiler equipped with a low NOx burners. The installation will consist of eight units rated at 6 mmBtu/hr each. The units will be fueled with natural gas at a rate of approximately 6000 ft^3/hr per unit. Manufacturer's information is included as Appendix A.

OPERATING SCHEDULE

The unit is a hot water boiler and will be operated to provide hot water and heat to the B/421 Phase III hangar.

3

EMISSION CALCULATIONS

CRITERIA POLLUTANT EMISSIONS

Proposed equipment potential to emit, as defined by District Rule 3001(W), is the maximum capacity of the emission unit to emit any regulated air pollutant under its physical and operational design. Criteria pollutant maximum potential to emit for each boiler based on emissions data provided by the boiler manufacturer and calculated based on 8760 hours per year of operation are included as Table 1. Maximum potential to emit criteria pollutants for all eight units is provided in Table 2. Maximum potential to emit PM and CO_2 based on AVAQMD emission factors and assuming 8760 hours per year of operation are included as Table 3.

HAP EMISSIONS

HAP emissions, also calculated based on maximum potential to emit, are included in Table 4.

4

RULE COMPLIANCE EVALUATION

Rule 401 – Visible Emissions

Rule 401 limits visible emissions opacity to less than 20 percent (or Ringelmann No. 1). During start up, visible emissions may exceed 20 percent opacity. However, emissions of this opacity are not expected to last three minutes or longer. In normal operating mode, visible emissions are not expected to exceed 20 percent opacity.

Rule 404 – Particulate Matter – Concentration

Rule 404 specifies standards of emissions for particulate matter concentrations. The use of a boiler fueled with natural gas achieves compliance with Rule 404.

Rule 405 – Solid Particulate Matter - Weight

Rule 405 limits particulate matter emissions from fuel combustion on a mass per unit combusted basis. The use of a boiler fueled with natural gas achieves compliance with Rule 404.

Rule 431.1– Sulfur Content in Fuels

Rule 431.1 limits the sulfur content in gaseous fuel. The provisions of the rule limit the selling or burning of gaseous fuels containing sulfur compounds in excess of 16 ppmv, calculated as H_2S.

Only pipeline quality natural gas will be used for fueling the boiler. The sole use of pipeline quality natural gas complies with Rule 431.1.

Rule 1146 - Emissions of Oxides of Nitrogen from Industrial, Institutional and Commercial Boilers, Steam Generators, and Process Heaters

Rule 1146 limits boilers equal to or greater than 5 million Btu per hour and greater than 90,000 therms per year of fuel use to 40 ppm (0.05 lb per10^6 Btu of heat input) NOx and

400 ppm CO. Emissions from the unit are guaranteed to meet the following emission rates:

- NOx – 7 ppm
- CO – 20 ppm

Compliance with the NOx and CO emission requirements will be determined according to procedures in District Source Test Method 100.1 - Instrumental Analyzer Procedures for Continuous Gaseous Emission Sampling (March 1989), or Method 7.1 - Determination of Nitrogen Oxide Emissions from Stationary Sources (March 1989) and Method 10.1 - Carbon Monoxide and Carbon Dioxide by Gas Chromatograph/Non-Dispersive Infrared Detector (GC/NDIR) - Oxygen by Gas Chromatograph-Thermal Conductivity (GC/TCD) (March 1989), or any other test method determined to be equivalent and approved before the test in writing by the Executive Officer of the District. Records of all source tests will be maintained for a period of five years and made available to District personnel upon request.

The rule further requires that the unit be tuned at least twice per year, at intervals from 4 to 8 months apart, in accordance with the procedure described in Attachment 1 of the rule or the unit manufacturer's specified tuning procedure. If the manufacturer's tuning procedure is used a copy of this procedure will be kept on site. If the unit does not operate throughout a continuous six-month period within a calendar year, only one tuneup is required for that calendar year.

Source testing and tuneups will be conducted as required. Compliance with Rule 1146 will be achieved.

Regulation XIII – New Source Review

<u>Rule 1303 – BACT</u>

Rule 1303 (A) mandates BACT for:

- Any new Permit Unit which emits, or has the Potential to Emit, 25 pounds per day or more of any Nonattainment Air Pollutant; or
- Any new or Modified Facility which emits, or has the Potential to Emit, 25 tons per year or more of any Nonattainment Air Pollutant

The 2020 SCAQMD BACT determination for a natural gas-fired boiler with a heat input rating of 8.4 mmBtu/hr follows:

VOC	NOx	SOx	CO	PM10
None	≤7 ppmv dry corrected to 3% O_2	Natural Gas	≤50 ppmv for watertube type, dry corrected to 3% O_2	Natural Gas

The use of low NOx burner and fueled with natural gas meets the requirement for BACT. Compliance with Rule 1303 (A) is achieved.

Rule 1303– Offsets

Offsets will be required for NOx at a rate of 1.3:1. NOx offsets totaling 3567 * 1.3 or 4637 pounds per year are required to permit the new boilers.

40 CFR 63 Subpart DDDDD - National Emission Standards for Hazardous Air Pollutants for Industrial, Commercial, and Institutional Boilers and Process Heaters

§63.7480 specifies that this subpart establishes national emission limitations and work practice standards for hazardous air pollutants (HAP) emitted from industrial, commercial, and institutional boilers and process heaters located at major sources of HAP.

40 CFR 63.7500 (a) (1) (e) requires that Boilers and process heaters in the units designed to burn gas 1 fuels subcategory with a heat input capacity greater than 5 million Btu per hour and less than 10 million Btu per hour must complete a tune-up every 2 years as specified in § 63.7540. Boilers and process heaters in the units designed to burn gas 1 fuels subcategory are not subject to the emission limits in Tables 1 and 2 or Tables 11 through 15 to this subpart, or the operating limits in Table 4 to this subpart.

AVAQMD Rule 1401 - New Source Review for Toxic Air Contaminants (TACs)

Rule 1401 establishes allowable risks for equipment requiring new permits pursuant to Rules 201 or 203. To demonstrate compliance with Rule 1401, risk assessment was prepared and submitted with this application.

5

FEE EVALUATION

Pursuant to Rule 301 (D) (1) any person who applies for the issuance of a new or modified permit and subject to the Provisions of Regulation XXX – Federal Operating Permits (Title V) shall be assessed a fee of $1008. This application filing fee is submitted with the application.

Total application fees included with this application are as follows:

6 MMBtu'hr boiler x 8 boilers x $1008 = $8064

TABLES

Table 1: Emission factors for NOx, VOC, CO, and SOx for the new B/421 Phase III boilers

F-Factor Calculation			Emission Calculations (per boiler)				
Fuel Use	6000000	Btu/hr	NOx	SOx	CO	VOC	
F-Factor	8710	dscf/mmBtu	7	1	20	4	ppm at 3% O2
Flue Gas Flow	52260	dscf at 0%O2	0.42679	0.06097	1.2194	0.24388	dscf/hr
	60970	dscf at 3%O2	12.08534841	1.726478345	34.52956689	6.90591338	l/hr
	73164	dscf at 6%O2	11.26040995	1.608629993	32.17259987	6.43451997	l/hr at STP
	5222.260582	lb/hr	0.502382884	0.071768983	1.435379667	0.28707593	moles/hr
			46	64.06	30	16	g/mole
			0.05090223	0.010126698	0.094848877	0.01011721	lb/hr
			445.9035392	88.70987801	830.8761599	88.6267904	lb/yr
			0.008483705	0.001687783	0.015808146	0.0016862	lb/mmBtu

Table 2: Potential to Emit NOx, VOC, CO, and SOx for the new B/421 Phase III boilers

No of Boilers	Emissions (lbs/year			
	NOx	SOx	CO	VOC
8	3567.23	709.68	6647.01	709.01

Table 3: Potential to Emit PM and CO2 for the new B/421 Phase III boilers

HHV Heat Input (mmBtu/hr/unit)	No of Units	Max Fuel Use mmscf/hr	Max Operation hr/yr	Max Fuel Use mmscf/yr	Pollutant	Emission Factor lb/mmscf	Emissions		
							Max Hourly (lbs)	Max Annual (lbs)	Max Annual (MT)
6000	8	0.048	8760	420.48	PM	7.6	0.36	3195.65	
					CO2	120000	5760	50457600	22908

Table 4: Potential to Emit TACs for new B/421 Phase III boilers

Max Fuel Use mmscf/hr	Max Operation hr/yr	Max Fuel Use mmscf/yr	Pollutant	CAS	Emission Factor lb/mmscf	Emissions (pounds)	
						Max Hourly	Max Annual
0.048	8760	420.48	Acenaphthene	83329	1.800E-06	8.64E-08	0.001
			Acenaphthylene	208968	1.800E-06	8.64E-08	0.001
			Acetaldehyde	75070	4.300E-03	2.06E-04	1.808
			Acrolein	107028	2.700E-03	1.30E-04	1.135
			Anthracene	120127	2.400E-06	1.15E-07	0.001
			Arsenic	7440382	2.000E-04	9.60E-06	0.084
			Barium	7440393	4.400E-03	2.11E-04	1.850
			Benzaldehyde	100527	1.640E-02	7.87E-04	6.896
			Benzene	71432	8.000E-03	3.84E-04	3.364
			Benzo(a)anthracene	56553	1.800E-06	8.64E-08	0.001
			Benzo(a)pyrene	50328	1.600E-06	7.68E-08	0.001
			Benzo(b)fluoranthene	205992	1.800E-06	8.64E-08	0.001
			Benzo(g,h,I)perylene	191242	1.600E-06	7.68E-08	0.001
			Benzo(k)fluoranthene	205823	1.800E-06	8.64E-08	0.001
			Beryllium	7440417	1.200E-05	5.76E-07	0.005
			Butane	106978	2.100E+00	1.01E-01	883.008
			Cadmium	7440439	1.100E-03	5.28E-05	0.463
			Chromium (total)	7440473	1.400E-03	6.72E-05	0.589
			Chrysene	218019	1.800E-06	8.64E-08	0.001
			Cobalt	7440484	8.400E-05	4.03E-06	0.035
			Copper	7440508	8.500E-04	4.08E-05	0.357
			Dibenzo(a,h)anthracene	53703	1.600E-06	7.68E-08	0.001
			Dichlorobenzene	25321226	1.200E-03	5.76E-05	0.505
			7,12-Dimethylbenz(a)anthracene	57976	1.600E-05	7.68E-07	0.007
			Ethane	74840	3.100E+00	1.49E-01	1303.488
			Ethyl Benzene	100414	9.500E-03	4.56E-04	3.995
			Fluoranthene	206440	3.000E-06	1.44E-07	0.001
			Fluorene	86737	2.800E-06	1.34E-07	0.001
			Formaldehyde	50000	1.700E-02	8.16E-04	7.148
			Hexane	110543	6.300E-03	3.02E-04	2.649
			Indeno(1,2,3-cd)pyrene	193395	1.800E-06	8.64E-08	0.001
			Lead	7439921	5.000E-04	2.40E-05	0.210
			Manganese	7439965	3.800E-04	1.82E-05	0.160
			Mercury	7439976	2.600E-04	1.25E-05	0.109
			3-methylchloranthrene	56495	1.800E-06	8.64E-08	0.001

Table 4: Potential to Emit TACs for new B/421 Phase III boilers

Max Fuel Use mmscf/hr	Max Operation hr/yr	Max Fuel Use mmscf/yr	Pollutant	CAS	Emission Factor lb/mmscf	Emissions (pounds)	
						Max Hourly	Max Annual
			2-Methylnaphthalene	91576	2.400E-05	1.15E-06	0.010
			Molybdenum	7439987	1.100E-03	5.28E-05	0.463
			Naphthalene	91203	3.000E-04	1.44E-05	0.126
			Nickel	7440020	2.100E-03	1.01E-04	0.883
			PAH's	1150	4.000E-04	1.92E-05	0.168
			Pentane	109660	2.600E+00	1.25E-01	1093.248
			Phenanathrene	85018	1.700E-05	8.16E-07	0.007
			Propane	74986	1.600E+00	7.68E-02	672.768
			Propylene	115071	7.310E-01	3.51E-02	307.371
			Pyrene	129000	5.000E-06	2.40E-07	0.002
			Selenium	7782492	2.400E-05	1.15E-06	0.010
			Toluene	108883	3.660E-02	1.76E-03	15.390
			Vanadium	7440622	2.300E-03	1.10E-04	0.967
			Xylenes	1210	2.720E-02	1.31E-03	11.437
			Zinc	7440666	2.900E-02	1.39E-03	12.194

A

MANUFACTURERS DATA

MODEL CFC-E BOILERS

500-6000 MBH

Dimensions and Ratings

Dimension Diagram CFC-E

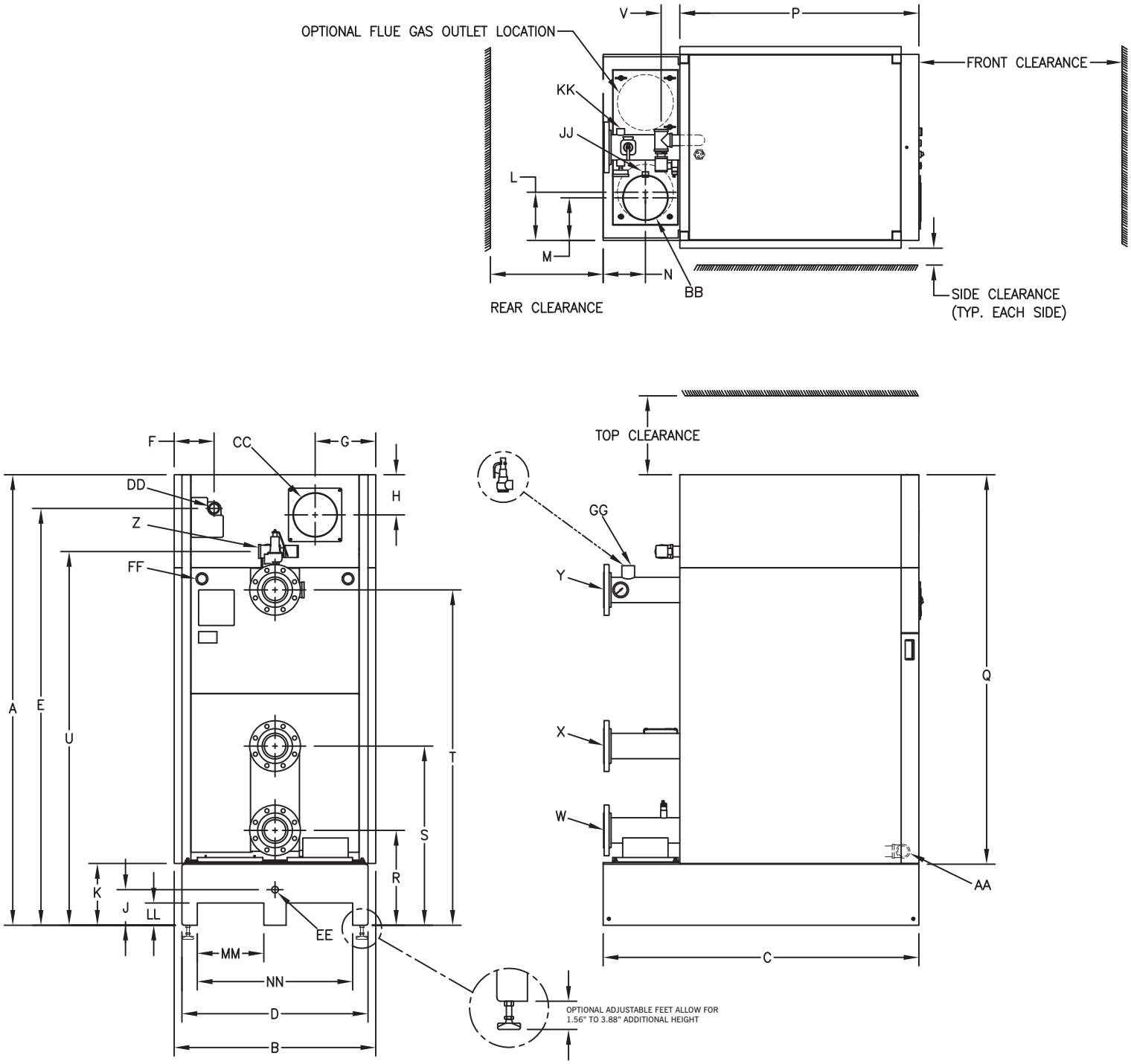

Dimensions Model CFC-E

ITEM	DIMENSIONS (inches)	500	750	1000	1500	2000	2500	3000	3500	4000	5000	6000
A	Overall Height	78.0	78.0	78.0	79.9	79.9	95.2	95.2	91.2	91.2	93.6	93.6
B	Overall Width	34.9	34.9	34.9	35.8	35.8	35.7	35.7	48.4	48.4	58.7	58.7
C	Overall Depth	49.4	49.4	49.4	56	56	56	56	68.4	68.4	80.6	80.6
D	Width Less Casing	32.1	32.1	32.1	33.0	33.0	33.0	33.0	45.7	45.7	55.9	55.9
E	Gas Connection to Floor	70.3	70.3	70.3	73.9	73.8	85.3	85.3	77.7	77.7	79.5	79.5
F	Side of Casing to Gas Connection	3.7	3.7	3.7	7.1	7.1	3.8	3.8	4.9	4.9	4.6	4.6
G	Side of Casing to Air Inlet	10.8	10.8	10.8	10.8	10.8	11.0	11.0	11.0	11.0	12.0	12.0
H	Top of Casing to Air Inlet	7.7	7.7	7.7	7.1	7.4	9.9	9.9	9.0	9.0	9.9	9.9
J	Floor to Condensate Drain	6.3	6.3	6.3	6.3	6.3	6.3	6.3	5.7	5.7	5.7	5.7
K	Floor to Bottom of Casing	11.0	11.0	11.0	11.0	11.0	11.4	11.4	11.4	11.4	12.0	12.0
L	Side of Base to Flue Outlet (Centered)	7.4	7.4	7.4	8.5	8.5	7.8	7.8	8.8	8.8	10.0	10.0
M	Side of Base to Flue Outlet (Offset)	6.4	6.4	6.4	7.5	7.5	N/A	N/A	N/A	N/A	N/A	N/A
N	Rear of Base to Flue Outlet	6.5	6.5	6.5	7.5	7.5	7.5	7.5	8.8	8.8	9.8	9.8
P	Casing Depth	36.3	36.3	36.3	42.4	42.4	42.4	42.4	52.5	52.5	62.1	62.1
Q	Casing Height	67.0	67.0	67.0	68.9	68.9	83.8	83.8	79.8	79.8	81.6	81.6
R	Floor to Lower Return Connection	16.8	16.8	16.8	16.8	16.8	16.9	16.9	16.8	16.8	18.5	18.5
S	Floor to Upper Return Connection	31.8	31.8	31.8	31.8	31.8	31.9	31.9	32.6	32.6	32.3	32.3
T	Floor to Supply Connection	59.5	59.5	59.5	59.5	59.5	70.4	70.4	62.3	62.3	63.3	63.3
U	Floor to Air vent Connection	66.3	66.3	66.3	66.3	66.3	76.9	76.9	70.3	70.3	71.9	71.9
V	Air Vent Line Projection from Rear of Casing	3.2	3.2	3.2	3.3	3.3	3.3	3.3	3.2	3.2	2.8	2.8
CONNECTIONS												
W	Water Low Temp. Return, Class150 RF Flange	2-1/2"	2-1/2"	2-1/2"	4"	4"	4"	4"	5"	5"	6"	6"
X	Water High Temp. Return, Class150 RF Flange	2-1/2"	2-1/2"	2-1/2"	4"	4"	4"	4"	5"	5"	6"	6"
Y	Water Outlet, Class150 RF Flange	2-1/2"	2-1/2"	2-1/2"	4"	4"	4"	4"	5"	5"	6"	6"
Z	Air Vent, NPT	1-1/2"	1-1/2"	1-1/2"	1-1/2"	1-1/2"	1-1/2"	1-1/2"	1-1/2"	1-1/2"	1-1/2"	1-1/2"
AA	Vessel Drain, NPT	1-1/2"	1-1/2"	1-1/2"	1-1/2"	1-1/2"	1-1/2"	1-1/2"	1-1/2"	1-1/2"	1-1/2"	1-1/2"
BB	Flue Gas Outlet											
	(Standard) - Nominal	6"	6"	8"	8"	8"	10"	10"	12"	12"	14"	14"
	(Option) - Nominal	8"	8"	6"	10"	10"	NA	NA	NA	NA	16"	16"
CC	Combustion Air - Nominal	6"	6"	6"	8"	8"	10"	10"	12	12	14"	14"
DD	Gas, NPT	1"	1"	1"	1-1/2"	1-1/2"	1-1/2"	2"	2	2	2"	2"
EE	Condensate Drain, NPT	1"	1"	1"	1"	1"	1"	1"	1"	1"	1"	1"
FF	Electrical Opening, Left or Right	1.6"	1.6"	1.6"	1.6"	1.6"	1.6"	1.6"	1.6"	1.6"	1.6"	1.6"
GG	Safety Relief Valve Vessel Connection, NPT	1-1/4"	1-1/4"	1-1/4"	1-1/4"	1-1/4"	2"	2"	2"	2"	2"	2"
JJ	Flue Coupling, NPT	3/4"	3/4"	3/4"	3/4"	3/4"	3/4"	3/4"	3/4"	3/4"	3/4"	3/4"
KK	Water Outlet Coupling, NPT	1/2"	1/2"	1/2"	1/2"	1/2"	1/2"	1/2"	1/2"	1/2"	1/2"	1/2"
FORK POCKETS (inches)												
LL	Pocket Height	4.0	4.0	4.0	4.0	4.0	4.0	4.0	4.0	4.0	4.0	4.0
MM	Pocket Width	11.8	11.8	11.8	11.8	11.8	11.8	11.8	15.7	15.7	17.6	17.6
NN	Overall Pocket Width	27.6	27.6	27.6	27.6	27.6	27.6	27.6	35.4	35.4	39.4	39.4
WEIGHTS												
	Dry Weight (lb)	1298	1298	1396	1861	2041	2420	2475	3574	3761	4901	5278
	Shipping Weight (lb)	1413	1413	1511	1986	2166	2541	2596	3726	3913	5073	5450
	Operating Weight (lb)	2065	2065	2113	2778	2858	3470	3492	5227	5304	7502	7659
	Water Volume (gallon)	92	92	86	110	98	126	122	198	185	312	285

CLEARANCES (inches)

	500-4000	5000-6000
Top	14	18
Side	3	3
Rear	20	20
Front	36	36

Notes:

Boiler rear must be accessible for servicing.

Side clearance to wall or between boilers.

Side clearance typical each side.

Clearance dimensions are for servicing the boiler only. Refer to local and national electrical codes for proper minimum front panel service clearances.

Local code requirements, if more stringent, should take precedence.

Dimensions (metric) Model CFC-E

ITEM	DIMENSIONS (mm)	500	750	1000	1500	2000	2500	3000	3500	4000	5000	6000
A	Overall Height	1982	1982	1982	2028	2028	2418	2418	2316	2316	2378	2378
B	Overall Width	886	886	886	908	908	907	907	1230	1230	1490	1490
C	Overall Depth	1255	1255	1255	1422	1422	1422	1422	1738	1738	2048	2048
D	Width Less Casing	816	816	816	838	838	838	838	1160	1160	1420	1420
E	Gas Connection to Floor	1786	1786	1786	1877	1875	2167	2167	1974	1974	2019	2019
F	Side of Casing to Gas Connection	95	95	95	180	180	97	97	124	124	117	117
G	Side of Casing to Air Inlet	275	275	275	273	376	279	279	279	279	305	305
H	Top of Casing to Air Inlet	196	196	196	180	188	251	251	229	229	251	251
J	Floor to Condensate Drain	160	160	160	160	160	160	160	145	145	145	145
K	Floor to Bottom of Casing	279	279	279	279	279	290	290	290	290	305	305
L	Side of Base to Flue Outlet	189	189	189	217	217	198	198	224	224	254	254
M	Side of Base to Flue Outlet (Offset)	164	164	164	192	192	NA	NA	NA	NA	NA	NA
N	Rear of Base to Flue Outlet	165	165	165	190	190	191	191	224	224	249	249
P	Casing Depth	921	921	921	1077	1077	1077	1077	1334	1334	1577	1577
Q	Casing Height	1703	1703	1703	1749	1749	2129	2129	2027	2027	2073	2073
R	Floor to Lower Return Connection	428	428	428	428	428	429	429	427	427	470	470
S	Floor to Upper Return Connection	808	808	808	808	808	810	810	828	828	820	820
T	Floor to Supply Connection	1511	1511	1511	1511	1511	1788	1788	1582	1582	1608	1608
U	Floor to Air vent Connection	1683	1683	1683	1683	1683	1953	1953	1786	1786	1826	1826
V	Air Vent Line Projection From Rear of Casing	81	81	81	84	84	84	84	81	81	71	71

FORK POCKETS (mm)

LL	Pocket Height	102	102	102	102	102	102	102	102	102	102	102
MM	Pocket Width	300	300	300	300	300	300	300	399	399	447	447
NN	Overall Pocket Width	700	700	700	700	700	701	701	899	899	1001	1001

WEIGHTS

	Dry Weight (kg)	589	589	633	844	926	1098	1123	1621	1706	2223	2394
	Shipping Weight (kg)	641	641	686	901	983	983	983	1690	1775	2301	2472
	Operating Weight (kg)	939	939	969	1260	1280	1280	1280	2371	2406	3403	3474
	Water Volume (liter)	350	350	324	416	370	477	462	750	700	1180	1080

CLEARANCES (mm)

	500-4000	5000-6000
Top	356	457
Side	76	76
Rear	508	508
Front	914	914

Notes:

Boiler rear must be accessible for servicing.

Side clearance to wall or between boilers.

Side clearance typical each side.

Clearance dimensions are for servicing the boiler only. Refer to local and national electrical codes for proper minimum front panel service clearances.

Local code requirements, if more stringent, should take precedence.

Boiler Ratings *(Sea Level to 2000 Feet)*

		Boiler Size										
Description	**Units**	**500**	**750**	**1000**	**1500**	**2000**	**2500**	**3000**	**3500**	**4000**	**5000**	**6000**
Input Max.	Btu/hr	500,000	750,000	1,000,000	1,500,000	2,000,000	2,500,000	3,000,000	3,500,000	4,000,000	5,000,000	6,000,000
	kcal/hr	126,000	189,000	252,000	378,000	504,000	630,000	756,000	882,000	1,008,000	1,260,000	1,512,000
Natural Gas	ft^3/hr	500	750	1000	1500	2000	2500	3000	3500	4000	5000	6000
Propane	ft^3/hr	200	300	400	600	800	1000	1200	1400	1600	2000	2400
Natural Gas	m^3/hr	14	21	28	42	57	71	85	99	113	142	170
Propane	m^3/hr	5.7	8.5	11	17	23	28	34	40	45	57	68
Output at 120/80 F [49/27 C] 100% Firing	Btu/hr	470,000	705,000	940,000	1,410,000	1,880,000	2,350,000	2,820,000	3,290,000	3,760,000	4,700,000	5,640,000
	kcal/hr	118,440	177,660	236,880	355,320	473,760	592,200	710,640	829,080	947,520	1,184,400	1,421,280
	bhp	14	21	28	42	56	70	84	98	112	140	168
	kW	138	207	275	413	551	689	826	964	1102	1377	1653
Output at 180/ 140 F [82/60 C] 100% Firing	Btu/hr	440,000	660,000	880,000	1,320,000	1,760,000	2,200,000	2,640,000	3,080,000	3,520,000	4,400,000	5,280,000
	kcal/hr	110,880	166,320	221,760	332,640	443,520	554,400	665,280	776,160	887,040	1,108,800	1,330,560
	bhp	13	20	26	39	53	66	79	92	105	131	158
	kW	129	193	258	387	516	645	774	903	1032	1290	1547
MAWP	psi	125	125	125	125	125	125	125	125	125	125	125
	bar	8.6	8.6	8.6	8.6	8.6	8.6	8.6	8.6	8.6	8.6	8.6
MAWT	°F	210	210	210	210	210	210	210	210	210	210	210
	°C	99	99	99	99	99	99	99	99	99	99	99
Water Content	gallons	92	92	86	110	98	126	122	198	185	312	285
	liters	350	350	324	416	370	477	462	750	700	1180	1080
Weight w/o Water	pounds	1,298	1,298	1,396	1,861	2,041	2,420	2,475	3,574	3,761	4,901	5,278
	kg	589	589	633	844	926	1098	1123	1621	1706	2223	2394
Fireside Heating Surface	ft^2	193	193	252	388	489	546	593	889	1008	1262	1500
	m^2	18	18	23	36	45	51	55	83	94	117	139
Standby Heat Loss	Btu/hr	1000	1500	2000	3000	4000	5000	6000	7000	8000	10000	12000
	Watts	293	440	586	879	1172	1465	1758	2051	2344	2930	3516
ECM Blower Motor Size	Watts	335	335	335	1,700	1,700	1,200	2,400	2,400	2,400	8,000	8,000
Operating Voltage, Blower	Volts/ph/Hz	115/1/60	115/1/60	115/1/60	115/1/60	115/1/60	115/1/60	460/3/60	460/3/60	460/3/60	460/3/60	460/3/60
Control Circuit	Volts/ph/Hz	115/1/60	115/1/60	115/1/60	115/1/60	115/1/60	115/1/60	115/1/60	115/1/60	115/1/60	115/1/60	115/1/60
Max Current Draw, Blower	Amperes	4	4	4	13.5	13.5	13	4	4	4	12.7	12.7
Max Current Draw Control Circuit	Amperes	1.5	1.5	1.5	2	2	2	2	2	2	2	2
Max Over Current Protection	Amperes	20	20	20	20	20	20	20	20	20	20	20
Condensate Qty Firing Nat. Gas & operating @ 120/80 F.	gal/hr	3.5	5	7	10	13.5	17.6	20.6	24.0	27.0	34.0	40.5
Flue Gas Mass Flow @ 100% Firing	lb/hr	557	835	1,113	1,670	2,226	2,863	3,340	3,897	4,452	5,567	6,678
	kg/hr	252	379	505	758	1010	1299	1515	1768	2019	2525	3029

*CFC-E 4000: 8% derate with 9 ppm NOx. If full capacity is required, contact your local Cleaver-Brooks representative for additional information.

e-mail: info@cleaverbrooks.com
Web address: http://www.cleaverbrooks.com

PERMIT APPLICATION
B/421 EMERGENCY GENERATOR

OCTOBER 2023

Prepared for:
NORTHROP GRUMMAN CORPORATION
Palmdale, California

Prepared by:
VERDANT ENVIRONMENTAL
South Pasadena, California

TABLE OF CONTENTS

1

Permit Application Forms 1

2

Process Description.....2
- Introduction 2
- Equipment Description 2
- Operating Schedule.....2

3

Emission Calculations.....3
- Criteria Pollutant Emissions 3
- HAP Emissions.....3

4

Rule Compliance Evaluation 4

5

Fee Evaluation.....7

TABLES

Table 1 Potential to Emit NOx, CO and VOC
Table 2 Potential to Emit PM and SO2
Table 3 Potential to Emit TACs

FIGURES

Figure 1 General Arrangement Drawing
Figure 2 Equipment Layout

APPENDICES

Appendix A Manufacturer's Data

1

PERMIT APPLICATION FORMS

ANTELOPE VALLEY AIR QUALITY MANAGEMENT DISTRICT
2551 West Ave H, Suite 102, Lancaster, CA 93536
Phone (661) 723-8070
www.avaqmd.ca.gov

APPLICATION FOR INTERNAL COMBUSTION ENGINE (I.C.E.) ONLY

PLEASE TYPE OR PRINT

Please refer to Rule 301 for Application Filing Fee.

Section 1: Facility/Owner Information

a. Permit To Be Issued To (Company Name): Northrop Grumman Aeronautics System Corporation	b. Federal Tax ID #: 95-1055798
c. Mailing/Billing Address (for above company name) 3520 E Avenue M, M/S 4F	
d. Facility or Business License Name (for equipment location): Northrop Grumman Aeronautics System Corporation - Palmdale	
e. Facility Address - Location of Equipment (if same as for company, enter "Same"): Same	Facility UTM or Lat/Long: 425E/3830N

f. Contact Name/Title: George Jung	Email Address: george.jung@ngc.com	Phone/Fax #.: 661-266-5394

g. General Nature of Business: Aircraft manufacturing

Type of Organization (check one):
☐ Individual Owner ☐ Partnership ■ Corporation ☐ Utility ☐ Local Agency ☐ State Agency ☐ Federal Agency

Section 2: Nature of Application

Application is hereby made for Authority To Construct (ATC) and Permit To Operate (PTO) the following equipment:
350 kW natural gas fired emergency Power Systems International (PSI) ICE

Application is for: ■ New Construction ☐ Modification ☐ Change of Owner	For modification or change of owner: Current Permit Number: _____

Do you claim Confidentiality of Data? ■ No ☐ Yes (attach explanation; specify which information provided is confidential)

Section 3: Equipment Information

Engine Function: ☐ Prime ■ Emergency ☐ Low-Use (<80 hr/yr) ☐ Portable ☐ Stand-by (used only when a permitted prime unit is down for maintenance or repair)

Engine Manufacturer: Rolls Royce	Engine Model: MTU 10V0183 GS350 18.3L CAC	Engine Serial Number:
Year of Manufacture: 2021	Date Installed:	
Rating (BHP): 566	Speed (RPM): 1800	Number of Cylinders: 4

Fuel Type: ☐ CARB Diesel ■ Natural Gas ☐ Propane/LPG ☐ Gasoline ☐ Digester Gas ☐ Landfill Gas
☐ Other (specify):_____

Alternate Fuel (if applicable) specify: (e.g. Propane backup for Natural Gas engine)

Engine Meter: ■ Hour Meter ☐ Dedicated Fuel Meter ☐ None

Cycle Type: ☐ two cycle ■ four cycle	Combustion Type: ■ Rich Burn ☐ Lean Burn

Check all that apply: ☐ Naturally Aspirated ☐ Turbocharged ☐ Aftercooled ☐ Intercooled ☐ Injection Timing Retarded
☐ Air to Fuel Ratio Controller ☐ Smoke Puff Limiter ☐ Electronic Control Module ☐ Staged Combustion ☐ Direct Fuel Injection
☐ Pre-Combustion Chamber ☐ Piston Scavenging

Add-on Emission Control Technology: ☐ No ■ Yes: Attach Manufacturer's specifications, CARB Certification or Source Test Data			
If yes: Manufacturer:	Model:	Serial #:	CARB EO#:
Type: ☐ SCR ☐ Non-S CR ☐ Particulate Trap ☐ EGR ☐ Oxidation Catalyst ■ Other (specify): 3-way catalyst			
Stack Data: Exhaust Stack Height from Ground: feet		Exhaust Stack Diameter: feet	
Stack is: ☐ horizontal ☐ vertical ☐ open ☐ weather cap			
Exhaust Vent Data: Exhaust Temp: 1125 °F	Maximum Exhaust Rate: 2070 CFM		

Section 4: Emissions Data

Emission Factor Basis: ■ Manufacturer ☐ Source Test ☐ AVAQMD Default ☐ USEPA AP-42

☐ Other (please specify): _____

USEPA Family Name: PPSIB18 3NGP CARB Executive Order Number: _____

Emissions Data: If no add-on controls are installed, enter "same" in Post Control Max. Emissions column

Pollutant	Pre-Control Max. Emissions	Units	Post Control Max. Emissions	Units
NOx			0.03	g/hp-hr
NMHC			0.01	g/hp-hr
CO			0.21	g/hp-hr
PM10	19.4	lb/MMcf		
SOx	0.59	lb/MMcf		

Section 5: Powered Item

This ICE is used to power:

■ Electrical Generator ☐ Compressor ☐ Pump ☐ Paint Spray Gun ☐ Conveyor or Drive ☐ Fire Pump

☐ Other (specify): _____

PERP Registration Number (if applicable):

Manufacturer: Model: Serial #: Size/Rating: 350 kW

Section 6: Operation Information

Fuel Consumption at Maximum Rated Load: ☐ gal/hour ■ SCF/hour ☐ MMBtu/hr

Typical Load: % of Maximum Rated Load

Facility Annual Throughput by Quarters (percent):	Expected Operating Hours of IC Engine:
☐ Uniform OR ____% Jan-Mar ____% Apr-Jun	____Hours/Day ____Days/Week ____Weeks/Year
____% Jul-Sep ____% Oct-Dec	50 Total Annual Hours

Section 7: Receptor Information

Distance (Feet) and direction to the property line of closest: Residence: Business: School:

Name of Closest School (K-12):

If the proposed ICE operates within 1,000 feet of a school site and operation results in the emission of hazardous air pollutants, a public notice will be required at the expense of the applicant (CA H&S §42301.6)

*Please note, District Staff may contact you for further information. Failure to provide additional information as requested in a timely manner may result in delays in the processing of this permit application.

Section 8: Certification

I hereby certify that all information contained herein is true and correct.

George Jung	Environmental		10/04/2023
Name of Responsible Official	Official Title	Signature of Responsible Official	Date Signed

Telephone Number: 661 266-5394 Email: george.jung@ngc.com

-For District Use only-

Application Number:	Invoice Number:	Permit Number:	Company/Facility Number

ANTELOPE VALLEY AIR QUALITY MANAGEMENT DISTRICT
2551 West Ave H, Suite 102, Lancaster, CA 93536
Phone (661) 723-8070
www.avaqmd.ca.gov

APPLICATION FOR INTERNAL COMBUSTION ENGINE (I.C.E.) ONLY

Application Submittal Instructions

1) Submit completed application to engineering@avaqmd.ca.gov

2) Pay the corresponding application fee via check or credit card

Payment by check:
Make check payable to: Antelope Valley AQMD
Mail the check with a copy of this completed application to:
Antelope Valley AQMD 2551 West Ave H, Suite 102, Lancaster, CA 93536

Payment by credit card:
Pay online at our website: http://www.avaqmd.ca.gov
Click "Pay Fees"
Please note a surcharge applies for all credit card payments.

If payment is made online via credit card, please email the receipt to engineering@avaqmd.ca.gov.

Should you have any additional questions, please, do not hesitate to contact the permitting division at 661-723-8070, or via email at engineering@avaqmd.ca.gov.

2

PROCESS DESCRIPTION

INTRODUCTION

Northrop Grumman Corporation (Northrop Grumman) is planning to install a new emergency generator at B/421, Site 4, AFP42. The equipment will be used as backup power for the new paint hangar, providing power to the hangar door, filter door and passenger elevators within the building. This location is part of the Northrop Grumman Facility ID No. 01816 and this equipment will be incorporated into the Northrop Grumman Title V permit.

EQUIPMENT DESCRIPTION

The unit is a Power Solution International (PSI) Engine Model PSI-NGE 18.3L Turbo Emergency or Non-Emergency Stationary Engine, EPA Engine Family XPSIB18.3NGP, 350 kWe. It is powered by a 566 BHP Rolls Royce engine Model MTU 10V0183 GS350 18.3L CAC**.** The unit is fueled with natural gas and equipped with a 3-way catalust.

OPERATING SCHEDULE

The unit is an emergency engine and will be operated not more than 50 hours per year for maintenance and testing.

3

EMISSION CALCULATIONS

CRITERIA POLLUTANT EMISSIONS

Proposed equipment potential to emit, as defined by District Rule 3001(W), is the maximum capacity of the emission unit to emit any regulated air pollutant under its physical and operational design. Pursuant to AQMD policy, only maintenance and testing emissions are included in the proposed emission calculation for emergency generators. Emission factors for NO_x, CO and VOC are as provided by the manufacturer with emissions calculated in Table 1. SO_2 and PM emissions, calculated using AVAQMD default emissions factors for 4 stroke rich burn engines, are included in Table 2.

HAP EMISSIONS

Hazardous Air Pollutant (HAP) emissions, also calculated based on maintenance and testing hours and AVAQMD default emission factors, are included in Table 3.

4

RULE COMPLIANCE EVALUATION

Rule 401 – Visible Emissions

Rule 401 limits visible emissions opacity to less than 20 percent (or Ringelmann No. 1). During start up, visible emissions may exceed 20 percent opacity. However, emissions of this opacity are not expected to last three minutes or longer. In normal operating mode, visible emissions are not expected to exceed 20 percent opacity.

Rule 404 – Particulate Matter – Concentration

Rule 404 specifies standards of emissions for particulate matter concentrations. The use of an engine fueled with natural gas achieves compliance with Rule 404.

Rule 405 – Solid Particulate Matter - Weight

Rule 405 limits particulate matter emissions from fuel combustion on a mass per unit combusted basis. The use of an engine fueled with natural gas achieves compliance with Rule 405.

Rule 1110.2 - Emissions from Stationary, Non-road & Portable Internal Combustion Engines

Engine units will be limited to use for emergency power, defined as when utility power is not available. A non-resettable operating hour meter will be installed and maintained on each engine unit to indicate elapsed engine operating time. Compliance with Rule 1110.2 will be achieved.

Regulation XIII – New Source Review

<u>Rule 1303 – BACT</u>

Rule 1303 (A) mandates BACT for:

- Any new Permit Unit which emits, or has the Potential to Emit, 25 pounds per day or more of any Nonattainment Air Pollutant; or

- Any new or Modified Facility which emits, or has the Potential to Emit, 25 tons per year or more of any Nonattainment Air Pollutant

As the Northrop Grumman facility has the potential to emit 25 tons per year or more of NOx, BACT is required. The use of a natural gas-fired engine equipped with a 3-way catalyst for emergency operation meets the requirement for BACT. Compliance with Rule 1303 (A) is achieved.

Rule 1303– Offsets

Offsets will be required for NOx at a rate of 1.3:1. A total of 2 pounds of NOx Emission Reduction Credits (ERCs) will be provided prior to permit issuance to offset the 1.87-pound increase in NOx emissions.

40 CFR 60 Subpart JJJJ - Standards of Performance for Stationary Spark Ignition Internal Combustion Engines

40 CFR 60 Subpart JJJJ applies to this unit as follows: §60.4230 (a)(4)(iv) Owners and operators of stationary SI ICE that commence construction after June 12, 2006, where the stationary SI ICE are manufactured on or after January 1, 2009, for emergency engines with a maximum engine power greater than 19 KW (25 HP).

§60.4233 (e) Owners and operators of stationary SI ICE with a maximum engine power greater than or equal to 75 KW (100 HP) (except gasoline and rich burn engines that use LPG) must comply with the emission standards in Table 1 to this subpart for their stationary SI ICE.

Table 1 to Subpart JJJ of Part 60 requires the following emission rates for engines with a HP rating of >130:

Pollutant	**Emission rate**
NOx	2.0 g/HP-hr (160 ppmvd@15% O2)
CO	4.0 g/HP-hr (540 ppmvd@15% O2)
VOC	1.0 g/HP-hr (86 ppmvd@15% O2)

The unit Northrop Grumman is planning to install has the following emission rates:

Pollutant	**Emission rate**
NOx	0.03 g/HP-hr
CO	0.21 g/HP-hr
VOC	0.01 g/HP-hr

Compliance with the requirements of 40 CFR 60 Subpart JJJJ is achieved.

40 CFR 63 Subpart ZZZZ - National Emissions Standards for Hazardous Air Pollutants for Stationary Reciprocating Internal Combustion Engines

Pursuant to § 63.6590 (c) for stationary RICE subject to regulations under 40 CFR Part 60, an affected source that is a new emergency spark-ignition stationary RICE with a site rating of less than or equal to 500 brake HP located at a major source of HAP emissions meets the requirements of this part by meeting the requirements of 40 CFR part 60 subpart JJJJ. No further requirements apply to the engine under this part.

AVAQMD Rule 1401 - New Source Review for Toxic Air Contaminants

Rule 1401 establishes allowable risks for equipment requiring new permits pursuant to Rules 201 or 203. To demonstrate compliance with Rule 1401, risk assessment was prepared and submitted with this application.

5

FEE EVALUATION

Pursuant to Rule 301 (D) (1) any person who applies for the issuance of a new or modified permit and subject to the Provisions of Regulation XXX – Federal Operating Permits (Title V) shall be assessed a fee of $1008. This application filing fee is submitted with the application.

Total application fees included with this application are as follows:

Emergency generator permit application x $1008 = $1008

TABLES

Table 1: Potential to Emit NOx, CO and VOC

	Max	Emission Rate (g/hp-hr)			PTE (lbs/year)		
Op_Hours	**hp**	**NOx**	**CO**	**VOC**	**NOx**	**CO**	**VOC**
50	566	0.03	0.21	0.01	1.87	13.09	0.62

Emission rates from Power Solution International for PSI EPA Engine Family PPSIB18.3NGP for Natural Gas fue

Table 2: Potential to Emit PM and SO2

Max Fuel Use mmcf/hr	Max Operation hr/yr	Max Fuel Use mmcf	Pollutant	Emission Factor lb/mmcf	Emissions (pounds)	
					Max Hourly	Max Annual
0.0035	50	0.17	PM	19.40	0.07	3.39
			SO2	0.588	0.002	0.10

Max fuel use:
At 100% of power rating for natural gas ft3/hr = 3498.8

Table 3: Potential to Emit TACs

Max Fuel Use mmcf/hr	Max Operation hr/yr	Max Fuel Use mmcf	Pollutant	CAS	Emission Factor lb/mmcf	Emissions (pounds)	
						Max Hourly	Max Annual
0.0035	50	0.17	1,1 - Dichloroethane	75343	1.13E-02	3.95E-05	1.98E-03
			1,1,2 - Trichloroetrhane	79005	1.53E-02	5.35E-05	2.68E-03
			1,1,2,2 - Tetrachloroethane	79345	2.53E-02	8.85E-05	4.43E-03
			1,2 - Dichloropropane	78875	1.30E-02	4.55E-05	2.27E-03
			1,3 - Dichloropropene	542756	1.27E-02	4.44E-05	2.22E-03
			1,3-Butadiene	106990	6.63E-01	2.32E-03	1.16E-01
			Acenaphthene	83329	1.94E-03	6.79E-06	3.39E-04
			Acenaphthylene	208968	1.45E-02	5.07E-05	2.54E-03
			Acetaldehyde	75070	2.79E+00	9.76E-03	4.88E-01
			Acrolein	107028	2.63E+00	9.20E-03	4.60E-01
			Ammonia	7664417	3.20E+00	1.12E-02	5.60E-01
			Benzene	71432	7.39E-02	2.59E-04	1.29E-02
			Benzo(b)fluoranthenen	205992	2.37E-04	8.29E-07	4.15E-05
			Benzo(g,h,l)perylene	191242	1.95E-04	6.82E-07	3.41E-05
			Benzo(k)fluoranthene	207089	1.03E-04	3.60E-07	1.80E-05
			Butyr/Isobutyaldehyde	78842	4.86E-02	1.70E-04	8.50E-03
			Carbon tetrachloride	56235	1.77E-02	6.19E-05	3.10E-03
			Chlorobenzene	108907	1.29E-02	4.51E-05	2.26E-03
			Chloroform	67663	1.37E-02	4.79E-05	2.40E-03
			Chrysene	218019	3.10E-04	1.08E-06	5.42E-05
			Ethyl benzene	100414	2.48E-03	8.68E-06	4.34E-04
			Ethylene dibromide	106934	2.13E-02	7.45E-05	3.73E-03
			Ethylene Dichloride	107062	1.13E-02	3.95E-05	1.98E-03
			Fluoranthene	206440	9.95E-04	3.48E-06	1.74E-04
			Fluorene	86737	6.91E-03	2.42E-05	1.21E-03
			Formaldehyde	50000	2.05E+01	7.17E-02	3.59E+00
			Methylene chloride	74953	4.12E-02	1.44E-04	7.21E-03
			Naphthalene	91203	9.71E-02	3.40E-04	1.70E-02
			PAH *	1150	1.41E-01	4.93E-04	2.47E-02
			Phenanthrene	85018	7.07E-03	2.47E-05	1.24E-03
			Propylene	115071	1.60E+01	5.60E-02	2.80E+00
			Pyrene	129000	1.79E-03	6.26E-06	3.13E-04
			Styrene	100425	1.19E-02	4.16E-05	2.08E-03
			Toluene	108883	5.58E-01	1.95E-03	9.76E-02
			Vinyl chloride	75014	7.18E-03	2.51E-05	1.26E-03
			Xylenes	1330207	1.95E-01	6.82E-04	3.41E-02

FIGURES

350kW NATURAL GAS - LEVEL 3 ENCLOSURE

TOTAL APPROXIMATE DIMENSIONS:
245"L x 86"W x 131"H

TOTAL APPROXIMATE WEIGHT: 17,494 LBS

DWG. #: GS350N6SGA(18.3L)L3-MI

NOTES:
1. APPROX. UNIT WEIGHT: DRY: 16,829 LBS WET: 17,494 LBS
2. HOUSING AND EXHAUST ARE NOT SHOWN IN TOP VIEW
3. HOUSING IS SOUND ATTENUATED WITH FOAM

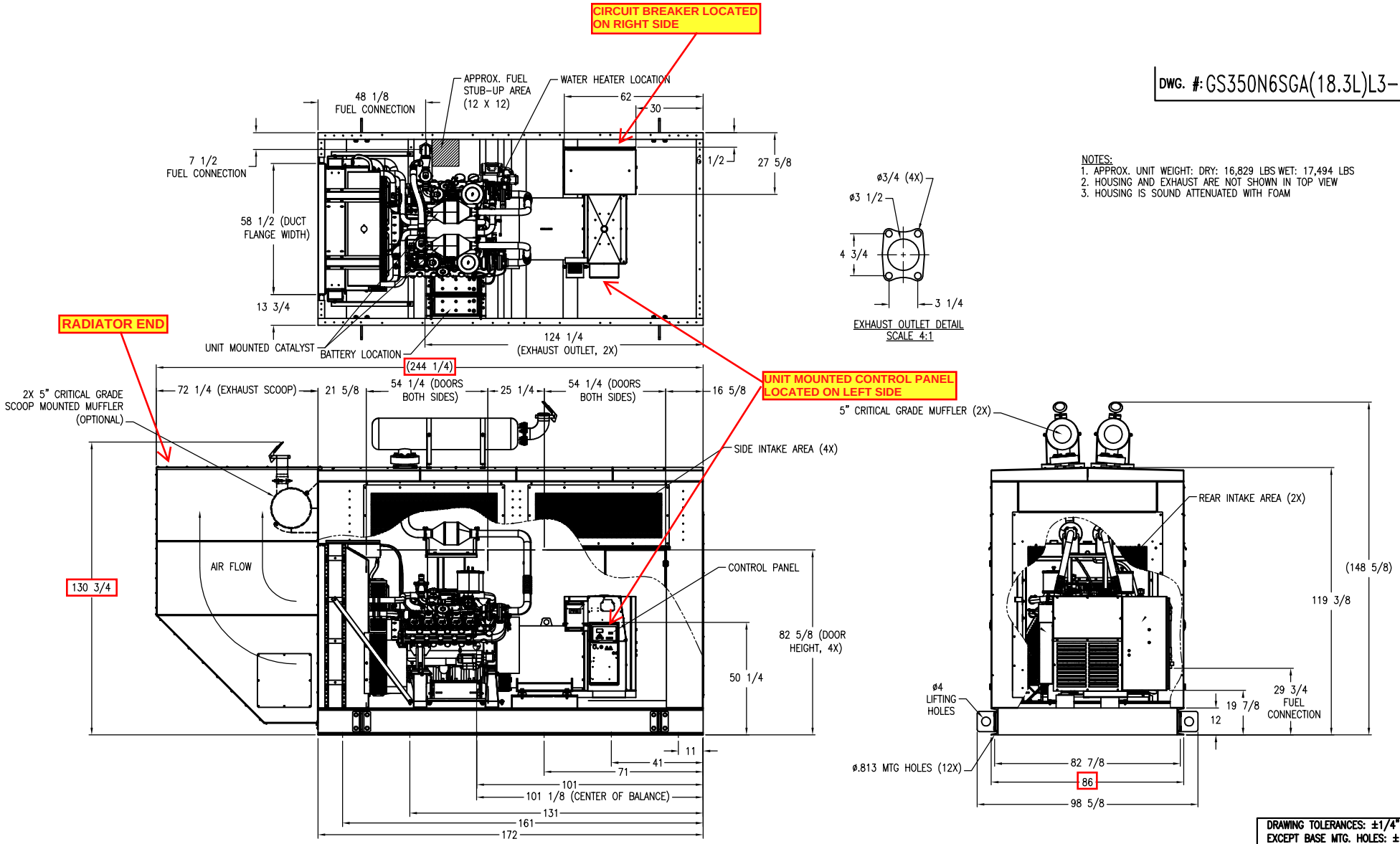

DRAWING TOLERANCES: ±1/4"
EXCEPT BASE MTG. HOLES: ±1/8"

REVISION	DATE	REVISION DESCRIPTION	INITIALS
B	2-28-12	ADDED SCOOP MOUNTED EXHAUST	CJK
A	12-03-10	INITIAL RELEASE	CJK

onsite energy

THIS DRAWING IS PROPERTY OF MTU ONSITE ENERGY CORPORATION AND CANNOT BE USED EXCEPT IN CONNECTION WITH MTU ONSITE ENERGY CORPORATION POWER GENERATION PROJECTS. ANY THIRD PARTY MODIFICATION MAY VOID THIS DRAWING. MTU ONSITE ENERGY CORPORATION RESERVES ALL RIGHTS OF THIS DRAWING.

GEN-SET INFORMATION

ENGINE: DOOSAN 18.3L	**ENCLOSURE:** PH104355
GENERATOR: 573 RSL	**BREAKER:** 1600 AMP
RADIATOR: W/ENGINE	**TANK:** NA
RADIATOR AMBIENT: NA	**MUFFLER:** NA
DUCT FLANGE: PH104313	**TRAILER:** NA
CONTROL PANEL: DGC-2020	**ISOLATORS:** PADS
BASE: 96644	

DIMENSIONAL LAYOUT

DRAWN TO SCALE ALL DIMENSIONS ARE IN INCHES	**MODEL:** GS350N6SGA
DATE: 12-03-10	**DRAWN BY:** CJK
DWG. #: GS350N6SGA(18.3L)L3-MI	

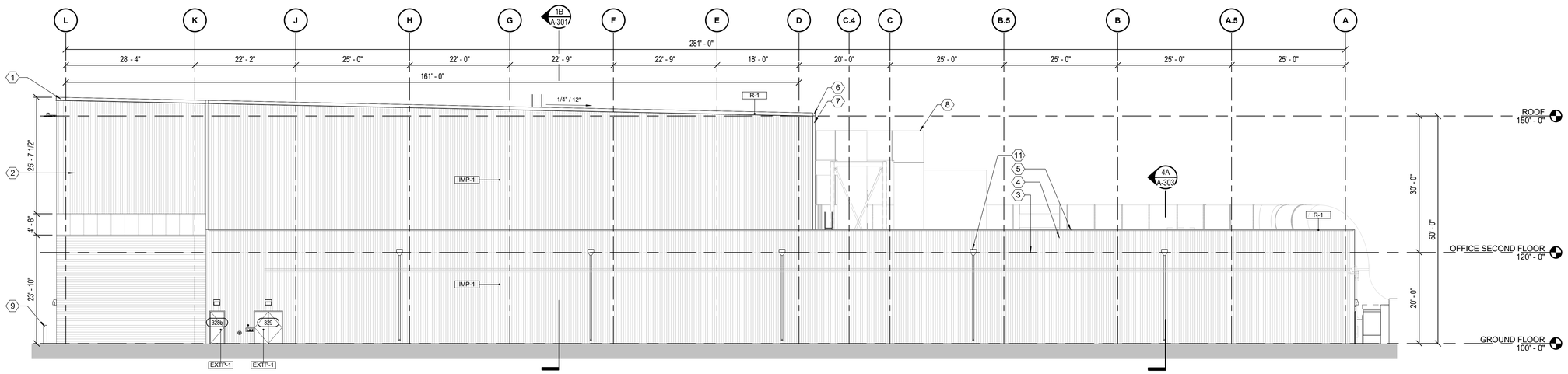

ELEVATION 1 A101.2

NORTH ELEVATION

0 10' 20'
SCALE IN FEET

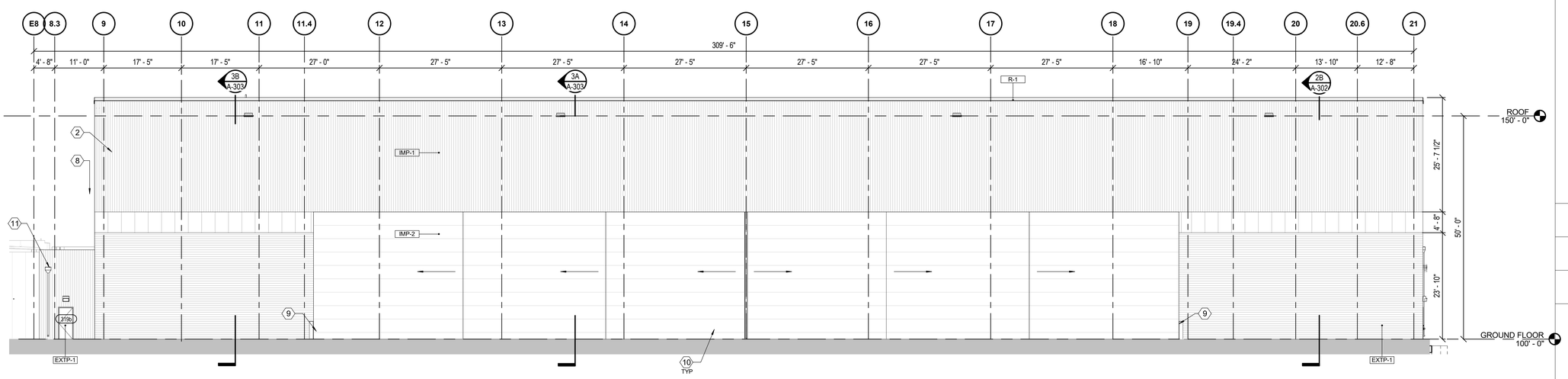

ELEVATION 2 A101.2

EAST ELEVATION

0 10' 20'
SCALE IN FEET

EXTERIOR ELEVATIONS KEYED NOTES: (#)

1 TPO ROOF SYSTEM, RE: ROOF PLAN.

2 EXTERIOR INSULATED METAL PANEL.

3 DASHED LINE OF ROOF BEYOND.

4 ROOF PARAPET.

5 COPING COVER.

6 ROOF GUTTERS.

7 (#) DOWNSPOUTS.

8 MECHANICAL EQUIPMENT. RE: MECHANICAL PLANS FOR ADDITIONAL DETAILS.

9 6" DIAMETER BOLLARDS, 4-FT HIGH, CONCRETE FILLED.

10 SLIDING POCKETED HANGAR DOORS. DOOR PANELS TO MATCH ADJACENT METAL PANEL.

11 SCUPPER, CONDUCTOR HEAD, AND DOWNSPOUT

EXTERIOR MATERIAL LEGEND:

KEY:	MATERIAL:
IMP-1	RIBBED INSULATED METAL PANEL BOD: TBD COLOR: TBD
IMP-2	RIBBED INSULATED METAL PANEL BOD: TBD COLOR: TBD
EXTP-1	EXTERIOR DOORS AND FRAMES PAINT COLOR BOD: TBD
R-1	ROOF MEMBRANE. RE: ROOF PLAN. COLOR: TBD

PRELIMINARY
NOT FOR CONSTRUCTION
06/22/2023

THIS DOCUMENT IS RELEASED FOR THE PURPOSE OF REVIEW UNDER THE AUTHORITY OF

IT IS NOT TO BE USED FOR CONSTRUCTION PURPOSES.

REVISIONS

REV	DESCRIPTION	DATE	APPROVED
A	ISSUED FOR 30% REVIEW	03/10/2023	RDB
B	ISSUED FOR 60% REVIEW	06/22/2023	RDB

BURNS McDONNELL
140 S. STATE COLLEGE BLVD. SUITE 100 BREA, CA 92821
BMCD LICENSE NO. 755238

APPROVED BY	NORTHROP GRUMMAN ENVIRONMENTAL HEALTH AND SAFETY	DATE
APPROVED BY	NORTHROP GRUMMAN FIRE DEPARTMENT	DATE
APPROVED BY	NORTHROP GRUMMAN SECURITY	DATE
APPROVED BY		DATE
APPROVED BY		DATE
APPROVED BY		DATE
APPROVED BY		DATE
	NORTHROP/GRUMMAN BUSINESS MANAGEMENT DEPT.	DATE
	NORTHROP/GRUMMAN FACILITIES ENGINEER MANAGER	DATE
PREPARED BY	ENGINEER	DATE
RECOMMENDED BY	NORTHROP/GRUMMAN FACILITY MANAGER - LESSEE	DATE
APPROVED BY	LESSOR SUPERVISING ENGINEER	DATE
APPROVED BY	LESSOR FIRE PROTECTION ENGINEER	DATE
APPROVED BY	LESSOR SAFETY SPECIALIST	DATE

NOTE: IF THIS SHEET IS LESS THAN 34"x44", THIS SHEET HAS BEEN REDUCED. REDUCE THE SCALE TO THE DRAWING ACCORDINGLY.

NORTHROP GRUMMAN
NORTHROP GRUMMAN CORP.
3520 EAST AVENUE "M"
PALMDALE, CALIFORNIA 93550

PLANT 42 | BUILDING NO. 421 | AREA

TITLE **B421 PHASE 3 COATING HANGAR**

EXTERIOR BUILDING ELEVATIONS

SCALE 1" = 10'-0"	SHEET OF	DATE 06/22/23
DRAWN P. FONKERT	DESIGNED R. BURTON	CHECKED B. BRADFORD
PROJECT NO. 148039		DRAWING NO. A-201

UNCLASSIFIED

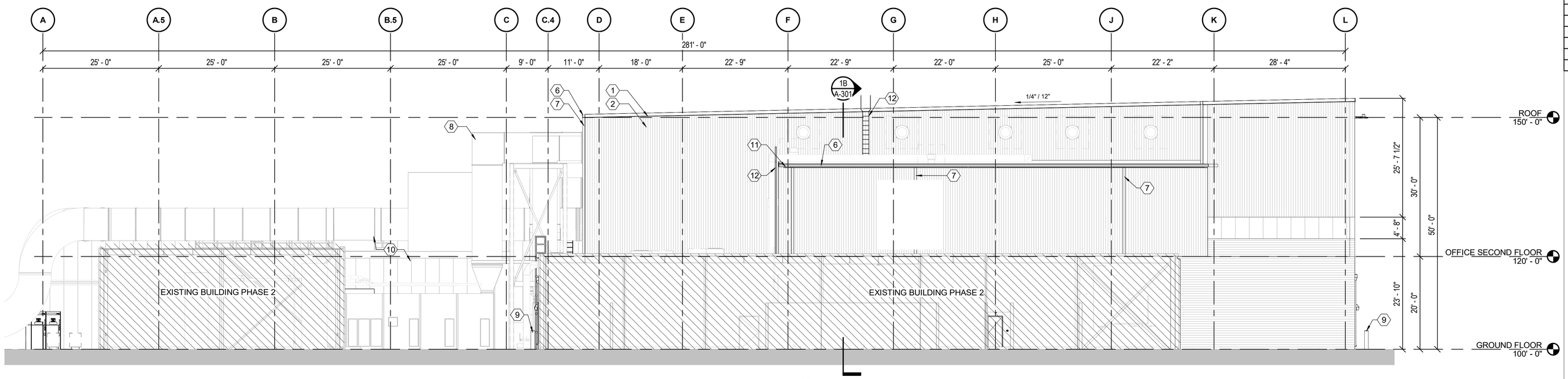

ELEVATION 3 A101.2

SOUTH ELEVATION

0 10' 20'

SCALE IN FEET

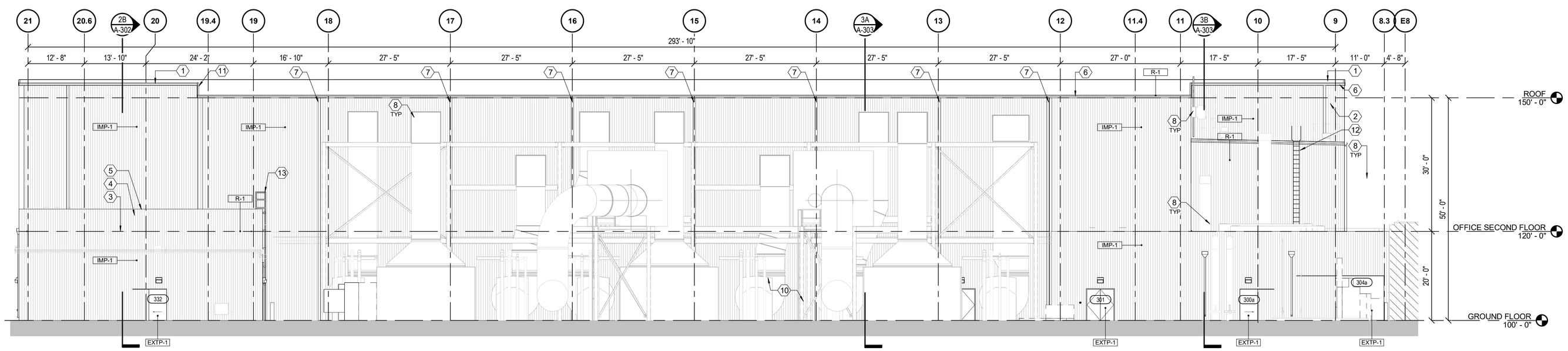

ELEVATION 4 A101.2

WEST ELEVATION

0 10' 20'

SCALE IN FEET

EXTERIOR ELEVATIONS KEYED NOTES: (#)

1 TPO ROOF SYSTEM, RE: ROOF PLAN.

2 EXTERIOR INSULATED METAL PANEL.

3 DASHED LINE OF ROOF BEYOND.

4 ROOF PARAPET.

5 COPING COVER.

6 ROOF GUTTERS.

7 (#) DOWNSPOUTS.

8 MECHANICAL EQUIPMENT. RE: MECHANICAL PLANS FOR ADDITIONAL DETAILS.

9 6" DIAMETER BOLLARDS, 4-FT HIGH, CONCRETE FILLED.

10 MECHANICAL YARD.

11 FASCIA.

12 <varies>

13 PARAPET LADDER, NO CAGE. BY OTHERS.

EXTERIOR MATERIAL LEGEND:

KEY:	MATERIAL:
IMP-1	RIBBED INSULATED METAL PANEL BOD: TBD COLOR: TBD
IMP-2	RIBBED INSULATED METAL PANEL BOD: TBD COLOR: TBD
EXTP-1	EXTERIOR DOORS AND FRAMES PAINT COLOR BOD: TBD
R-1	ROOF MEMBRANE. RE: ROOF PLAN. COLOR: TBD

NOT IN SCOPE - EXISTING BUILDING PHASE 2

PRELIMINARY
NOT FOR CONSTRUCTION
06/22/2023

THIS DOCUMENT IS RELEASED FOR THE PURPOSE OF REVIEW UNDER THE AUTHORITY OF

IT IS NOT TO BE USED FOR CONSTRUCTION PURPOSES.

REVISIONS

REV	DESCRIPTION	DATE	APPROVED
A	ISSUED FOR 30% REVIEW	03/10/2023	RDB
B	ISSUED FOR 60% REVIEW	06/22/2023	RDB

BURNS McDONNELL
140 S. STATE COLLEGE BLVD. SUITE 100 BREA, CA 92821
BMCD LICENSE NO. 755238

APPROVED BY	NORTHROP GRUMMAN ENVIRONMENTAL HEALTH AND SAFETY	DATE
APPROVED BY	NORTHROP GRUMMAN FIRE DEPARTMENT	DATE
APPROVED BY	NORTHROP GRUMMAN SECURITY	DATE
APPROVED BY		DATE
APPROVED BY		DATE
APPROVED BY		DATE
APPROVED BY		DATE
	NORTHROP/GRUMMAN BUSINESS MANAGEMENT DEPT.	DATE
	NORTHROP/GRUMMAN FACILITIES ENGINEER MANAGER	DATE
PREPARED BY	ENGINEER	DATE
RECOMMENDED BY	NORTHROP/GRUMMAN FACILITY MANAGER - LESSEE	DATE
APPROVED BY	LESSOR SUPERVISING ENGINEER	DATE
APPROVED BY	LESSOR FIRE PROTECTION ENGINEER	DATE
APPROVED BY	LESSOR SAFETY SPECIALIST	DATE

NOTE: IF THIS SHEET IS LESS THAN 34"x44", THIS SHEET HAS BEEN REDUCED. REDUCE THE SCALE TO THE DRAWING ACCORDINGLY.

UNCLASSIFIED

NORTHROP GRUMMAN
NORTHROP GRUMMAN CORP.
3520 EAST AVENUE "M"
PALMDALE, CALIFORNIA 93550

PLANT 42 BUILDING NO. 421 AREA

TITLE **B421 PHASE 3 COATING HANGAR**

EXTERIOR BUILDING ELEVATIONS

SCALE As indicated SHEET OF DATE 06/22/23

DRAWN P. FONKERT DESIGNED R. BURTON CHECKED B. BRADFORD

PROJECT NO. 148039 DRAWING NO. A-202

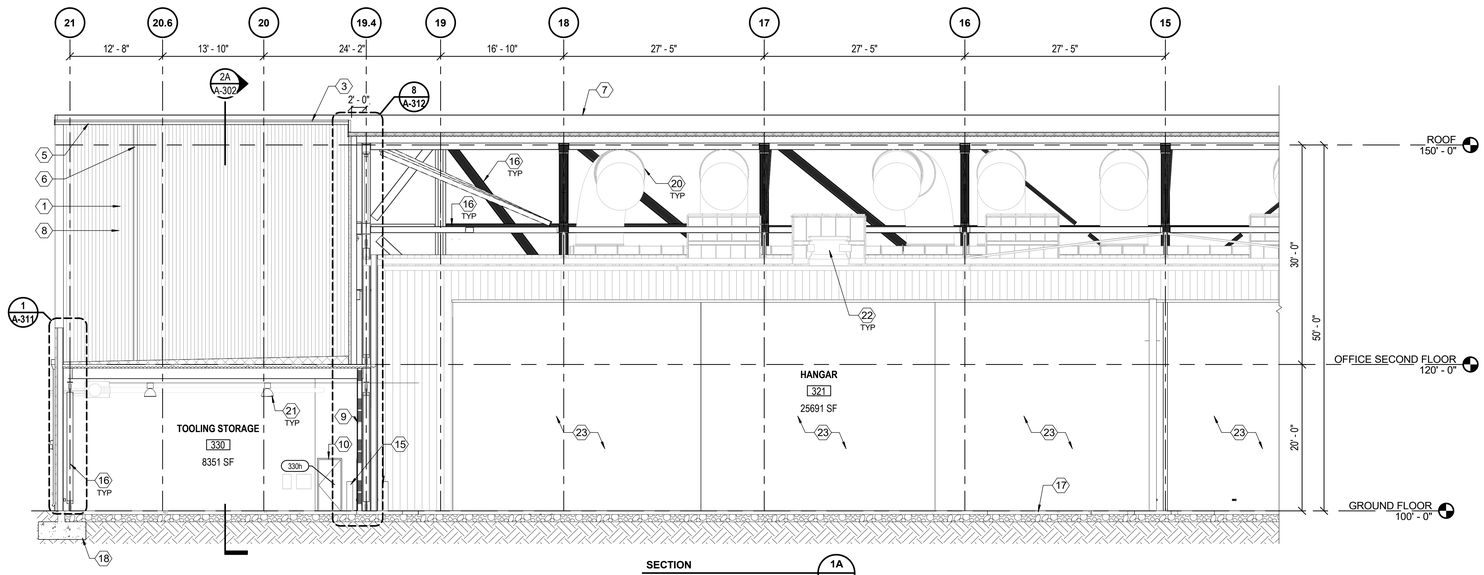

SECTION
SECTION NORTH-SOUTH A
1A
A101.2
0 4' 8' 16'

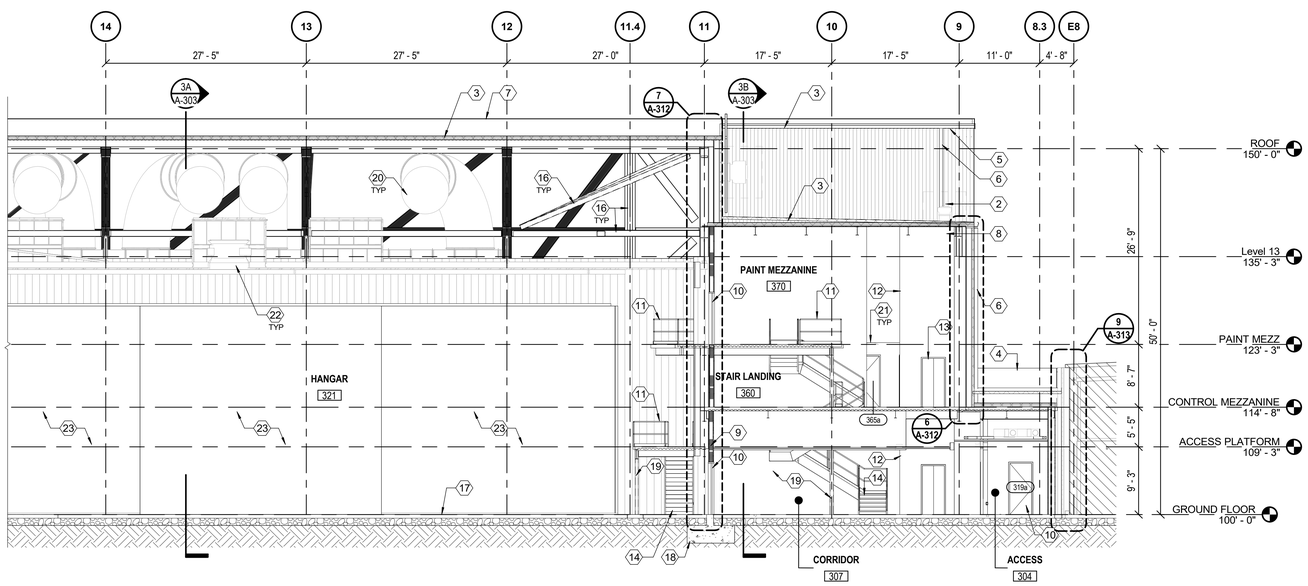

SECTION
SECTION NORTH-SOUTH B
1B
A101.2
0 4' 8' 16'

BUILDING SECTIONS KEYED NOTES: (#)

1. NORTH WALL OF HANGAR DOOR POCKET, BEYOND.
2. SOUTH WALL OF HANGAR DOOR POCKET, BEYOND.
3. TPO ROOF SYSTEM, RE: ROOF PLAN.
4. ROOF PARAPET.
5. ROOF GUTTERS.
6. DOWNSPOUTS.
7. LINE OF ROOF BEYOND.
8. INSULATED METAL PANEL WALL, RE: ELEVATIONS.
9. METAL STUD WALL, RE: FLOOR PLANS.
10. HOLLOW METAL DOOR, RE: DOOR SCHEDULE.
11. PROVIDE GUARDRAIL.
12. SHAFT WALL.
13. ELEVATOR DOORS.
14. STAIRS.
15. 6" DIAMETER BOLLARDS, RE: FLOOR PLAN.
16. STRUCTURAL FRAMING, RE: STRUCTURAL.
17. CONCRETE FLOOR SLAB, RE: STRUCTURAL.
18. CONCRETE FOUNDATION, RE: STRUCTURAL.
19. STEEL COLUMN, RE: STRUCTURAL.
20. MECHANICAL EQUIPMENT. RE: MECHANICAL PLANS FOR ADDITIONAL DETAILS.
21. LIGHTING, RE: ELECTRICAL.
22. FOAM GENERATOR, RE: FIRE PROTECTION.
23. PANEL SLIDING FILTER DOORS PER BOOTH VENDOR.

NOT IN SCOPE - EXISTING BUILDING PHASE 2

PRELIMINARY
NOT FOR CONSTRUCTION
06/22/2023

THIS DOCUMENT IS RELEASED FOR THE PURPOSE OF REVIEW UNDER THE AUTHORITY OF

IT IS NOT TO BE USED FOR CONSTRUCTION PURPOSES.

REVISIONS

REV	DESCRIPTION	DATE	APPROVED
A	ISSUED FOR 30% REVIEW	03/10/2023	RDB
B	ISSUED FOR 60% REVIEW	06/22/2023	RDB

BURNS McDONNELL
140 S. STATE COLLEGE BLVD. SUITE 100 BREA, CA 92821
BMCD LICENSE NO. 755238

APPROVED BY	NORTHROP GRUMMAN ENVIRONMENTAL HEALTH AND SAFETY	DATE
APPROVED BY	NORTHROP GRUMMAN FIRE DEPARTMENT	DATE
APPROVED BY	NORTHROP GRUMMAN SECURITY	DATE
APPROVED BY		DATE
APPROVED BY		DATE
APPROVED BY		DATE
APPROVED BY		DATE
	NORTHROP/GRUMMAN BUSINESS MANAGEMENT DEPT.	DATE
	NORTHROP/GRUMMAN FACILITIES ENGINEER MANAGER	DATE
PREPARED BY	ENGINEER	DATE
RECOMMENDED BY	NORTHROP/GRUMMAN FACILITY MANAGER - LESSEE	DATE
APPROVED BY	LESSOR SUPERVISING ENGINEER	DATE
APPROVED BY	LESSOR FIRE PROTECTION ENGINEER	DATE
APPROVED BY	LESSOR SAFETY SPECIALIST	DATE

NOTE: IF THIS SHEET IS LESS THAN 34"x44", THIS SHEET HAS BEEN REDUCED. REDUCE THE SCALE TO THE DRAWING ACCORDINGLY.

NORTHROP GRUMMAN
NORTHROP GRUMMAN CORP.
3520 EAST AVENUE "M"
PALMDALE, CALIFORNIA 93550

PLANT 42 | BUILDING NO. 421 | AREA

TITLE **B421 PHASE 3 COATING HANGAR**

BUILDING SECTIONS

SCALE 1/8" = 1'-0"	SHEET OF	DATE 06/22/23
DRAWN P. FONKERT	DESIGNED R. BURTON	CHECKED B. BRADFORD
PROJECT NO. 148039		DRAWING NO. A-301

UNCLASSIFIED

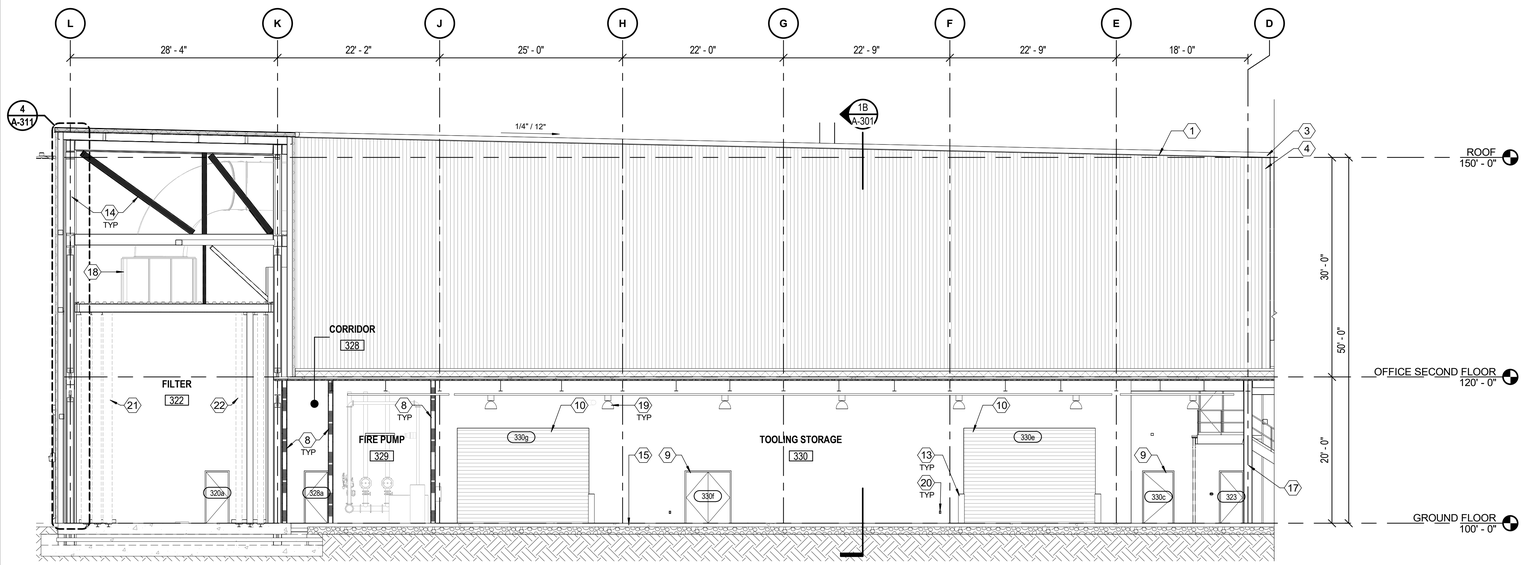

SECTION
2A
A101.2
SECTION EAST-WEST A
0 4' 8' 16'
SCALE IN

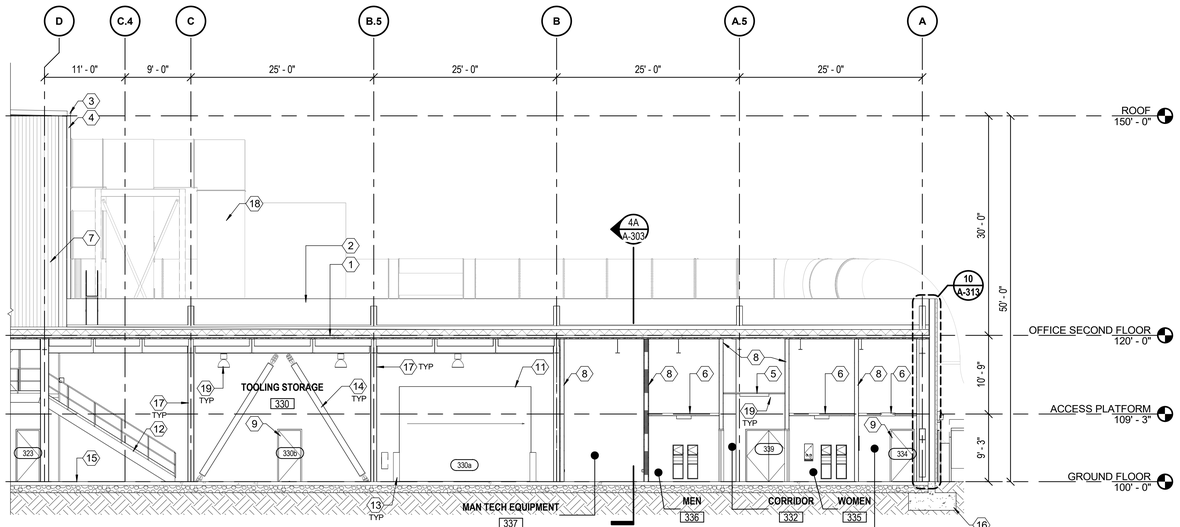

SECTION
2B
A101.2
SECTION EAST-WEST B
0 4' 8' 16'
SCALE IN

BUILDING SECTIONS KEYED NOTES: (#)

1 TPO ROOF SYSTEM, RE: ROOF PLAN.

2 ROOF PARAPET.

3 ROOF GUTTERS.

4 DOWNSPOUTS.

5 ACOUSTICAL CEILING TILE.

6 GYPSUM BOARD CEILING.

7 INSULATED METAL PANEL WALL, RE: ELEVATIONS.

8 METAL STUD WALL, RE: FLOOR PLANS.

9 HOLLOW METAL DOOR, RE: DOOR SCHEDULE.

10 OVER HEAD COILING DOOR. PROVIDE STRUCTURAL FRAMING FOR DOOR WITHIN WALL AS REQUIRED. RE: DOOR SCHEDULE & STRUCTURAL.

11 ROLLING INDUSTRIAL DOOR ON IMP WALL, RE: DOOR SCHEDULE.

12 STAIRS.

13 6" DIAMETER BOLLARDS, RE: FLOOR PLAN.

14 STRUCTURAL FRAMING, RE: STRUCTURAL.

15 CONCRETE FLOOR SLAB, RE: STRUCTURAL.

16 CONCRETE FOUNDATION, RE: STRUCTURAL.

17 STEEL COLUMN, RE: STRUCTURAL.

18 MECHANICAL EQUIPMENT. RE: MECHANICAL PLANS FOR ADDITIONAL DETAILS.

19 LIGHTING, RE: ELECTRICAL.

20 RECEPTACLES, RE: ELECTRICAL.

21 HANGAR DOORS.

22 FILTER DOORS.

NOT IN SCOPE - EXISTING BUILDING PHASE 2

PRELIMINARY
NOT FOR CONSTRUCTION
06/22/2023

THIS DOCUMENT IS RELEASED FOR THE PURPOSE OF REVIEW UNDER THE AUTHORITY OF

IT IS NOT TO BE USED FOR CONSTRUCTION PURPOSES.

REVISIONS

REV	DESCRIPTION	DATE	APPROVED
A	ISSUED FOR 30% REVIEW	03/10/2023	RDB
B	ISSUED FOR 60% REVIEW	06/22/2023	RDB

BURNS McDONNELL
140 S. STATE COLLEGE BLVD. SUITE 100 BREA, CA 92821
BMCD LICENSE NO. 755238

APPROVED BY	NORTHROP GRUMMAN ENVIRONMENTAL HEALTH AND SAFETY	DATE
APPROVED BY	NORTHROP GRUMMAN FIRE DEPARTMENT	DATE
APPROVED BY	NORTHROP GRUMMAN SECURITY	DATE
APPROVED BY		DATE
APPROVED BY		DATE
APPROVED BY		DATE
APPROVED BY		DATE
	NORTHROP/GRUMMAN BUSINESS MANAGEMENT DEPT.	DATE
	NORTHROP/GRUMMAN FACILITIES ENGINEER MANAGER	DATE
PREPARED BY	ENGINEER	DATE
RECOMMENDED BY	NORTHROP/GRUMMAN FACILITY MANAGER - LESSEE	DATE
APPROVED BY	LESSOR SUPERVISING ENGINEER	DATE
APPROVED BY	LESSOR FIRE PROTECTION ENGINEER	DATE
APPROVED BY	LESSOR SAFETY SPECIALIST	DATE

NOTE: IF THIS SHEET IS LESS THAN 34"x44", THIS SHEET HAS BEEN REDUCED. REDUCE THE SCALE TO THE DRAWING ACCORDINGLY.

NORTHROP GRUMMAN
NORTHROP GRUMMAN CORP.
3520 EAST AVENUE "M"
PALMDALE, CALIFORNIA 93550

PLANT 42 | BUILDING NO. 421 | AREA

TITLE **B421 PHASE 3 COATING HANGAR**

BUILDING SECTIONS

SCALE 1/8" = 1'-0"	SHEET OF	DATE 06/22/23
DRAWN P. FONKERT	DESIGNED R. BURTON	CHECKED B. BRADFORD
PROJECT NO. 148039		DRAWING NO. A-302

UNCLASSIFIED

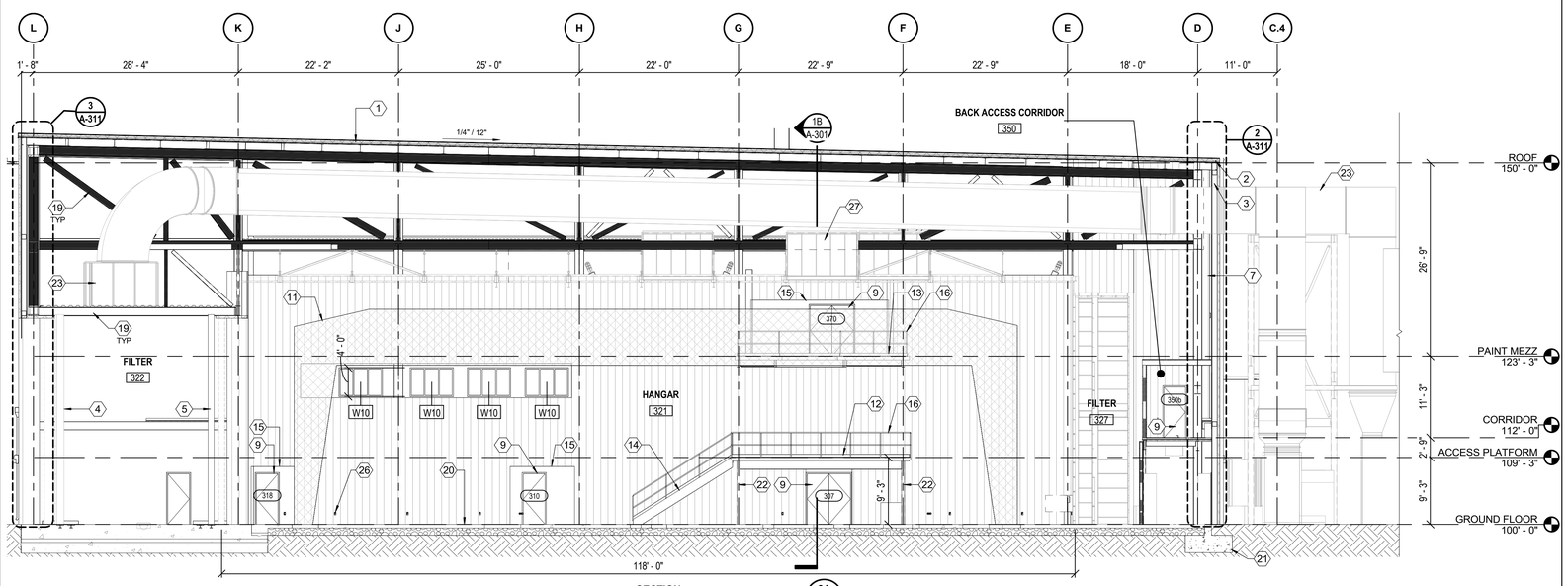

SECTION 3A A101.2
SECTION EAST / WEST
0 4' 8' 16'

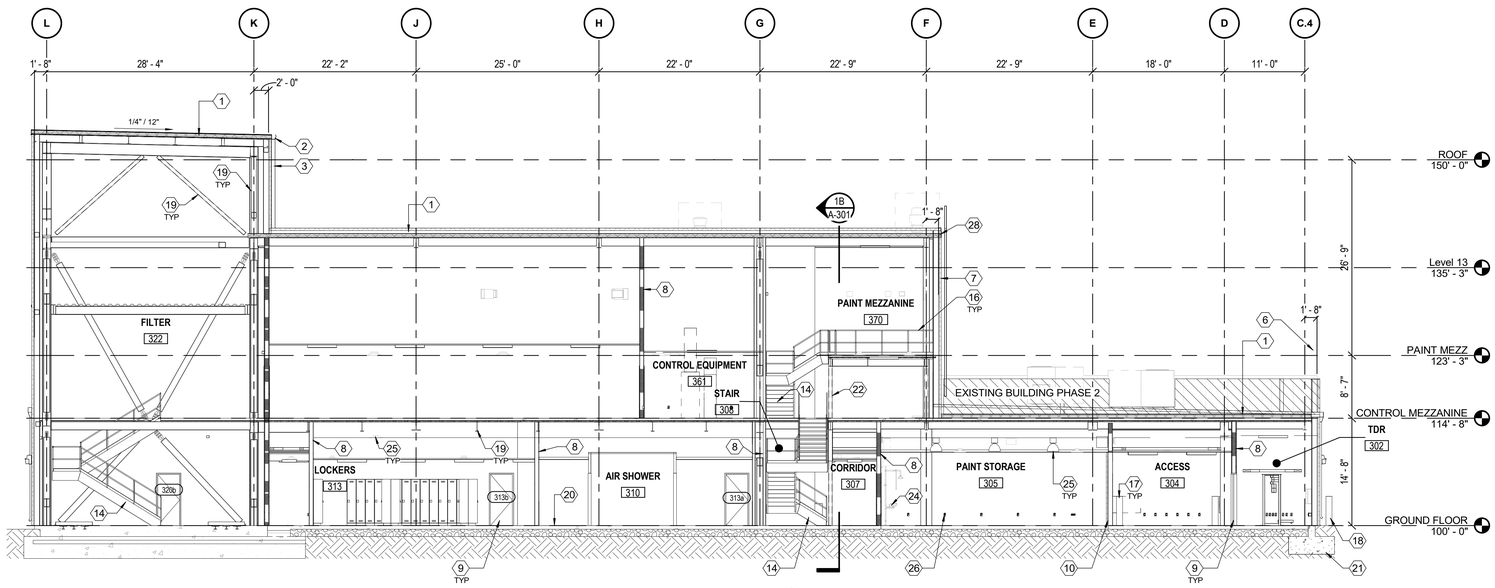

SECTION 3B A101.2
SECTION EAST-WEST
0 4' 8' 16'

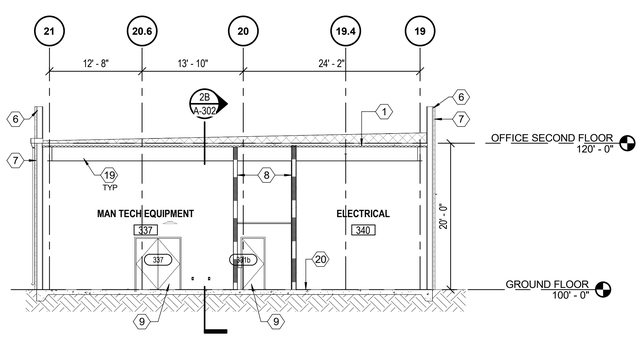

SECTION 4A A101.2
SECTION NORTH / SOUTH
0 4' 8' 16'

BUILDING SECTIONS KEYED NOTES: #

1 TPO ROOF SYSTEM, RE: ROOF PLAN.
2 ROOF GUTTERS.
3 DOWNSPOUTS.
4 HANGAR DOORS.
5 FILTER DOORS.
6 ROOF PARAPET.
7 INSULATED METAL PANEL WALL, RE: ELEVATIONS.
8 METAL STUD WALL, RE: FLOOR PLANS.
9 HOLLOW METAL DOOR, RE: DOOR SCHEDULE.
10 OVER HEAD COILING DOOR, RE: DOOR SCHEDULE.
11 GANTRY CRANE, RE: STRUCTURAL
12 EQUIPMENT SERVICE PLATFORM. NO ACCESS TO ADJACENT ROOMS.
13 PAINT POT PLATFORM.
14 STAIRS.
15 WALL OPENING.
16 PROVIDE GUARDRAILS.
17 6" (INTERIOR) DIAMETER BOLLARDS, BOLTED. SEE INTERIOR DETAILS.
18 6" DIAMETER BOLLARDS, CONCRETE FILLED. SEE EXTERIOR SITE DETAILS.
19 STRUCTURAL FRAMING, RE: STRUCTURAL.
20 CONCRETE FLOOR SLAB, RE: STRUCTURAL.
21 CONCRETE FOUNDATION, RE: STRUCTURAL.
22 STEEL COLUMN, RE: STRUCTURAL.
23 MECHANICAL EQUIPMENT. RE: MECHANICAL PLANS FOR ADDITIONAL DETAILS.
24 EYEWASH STATION, RE: MECHANICAL/PLUMBING.
25 LIGHTING, RE: ELECTRICAL.
26 RECEPTACLES, RE: ELECTRICAL.
27 FOAM GENERATOR, RE: FIRE PROTECTION.
28 FASCIA.

NOT IN SCOPE - EXISTING BUILDING PHASE 2

PRELIMINARY
NOT FOR CONSTRUCTION
06/22/2023

THIS DOCUMENT IS RELEASED FOR THE PURPOSE OF REVIEW UNDER THE AUTHORITY OF

IT IS NOT TO BE USED FOR CONSTRUCTION PURPOSES.

REVISIONS

REV	DESCRIPTION	DATE	APPROVED
A	ISSUED FOR 30% REVIEW	03/10/2023	RDB
B	ISSUED FOR 60% REVIEW	06/22/2023	RDB

BURNS McDONNELL
140 S. STATE COLLEGE BLVD. SUITE 100 BREA, CA 92821
BMCD LICENSE NO. 755238

APPROVED BY	NORTHROP GRUMMAN ENVIRONMENTAL HEALTH AND SAFETY	DATE
APPROVED BY	NORTHROP GRUMMAN FIRE DEPARTMENT	DATE
APPROVED BY	NORTHROP GRUMMAN SECURITY	DATE
APPROVED BY		DATE
APPROVED BY		DATE
APPROVED BY		DATE
APPROVED BY		DATE
	NORTHROP/GRUMMAN BUSINESS MANAGEMENT DEPT.	DATE
	NORTHROP/GRUMMAN FACILITIES ENGINEER MANAGER	DATE
PREPARED BY	ENGINEER	DATE
RECOMMENDED BY	NORTHROP/GRUMMAN FACILITY MANAGER - LESSEE	DATE
APPROVED BY	LESSOR SUPERVISING ENGINEER	DATE
APPROVED BY	LESSOR FIRE PROTECTION ENGINEER	DATE
APPROVED BY	LESSOR SAFETY SPECIALIST	DATE

NOTE: IF THIS SHEET IS LESS THAN 34"x44", THIS SHEET HAS BEEN REDUCED. REDUCE THE SCALE TO THE DRAWING ACCORDINGLY.

UNCLASSIFIED

NORTHROP GRUMMAN
NORTHROP GRUMMAN CORP.
3520 EAST AVENUE "M"
PALMDALE, CALIFORNIA 93550

PLANT 42 | BUILDING NO. 421 | AREA

TITLE
B421 PHASE 3 COATING HANGAR
BUILDING SECTIONS

SCALE 1/8" = 1'-0"	SHEET OF	DATE 06/22/23
DRAWN P. FONKERT	DESIGNED R. BURTON	CHECKED B. BRADFORD
PROJECT NO. 148039		DRAWING NO. A-303

Appendix A

MANUFACTURERS DATA

	UNITED STATES ENVIRONMENTAL PROTECTION AGENCY **2023 MODEL YEAR** **CERTIFICATE OF CONFORMITY** **WITH THE CLEAN AIR ACT**	**OFFICE OF TRANSPORTATION** **AND AIR QUALITY** **ANN ARBOR, MICHIGAN 48105**

Certificate Issued To: Power Solutions International, Inc. (U.S. Manufacturer or Importer) **Certificate Number: PPSIB18.3NGP-021**	**Effective Date:** **06/13/2022** **Expiration Date:** **12/31/2023**	**Byron J. Bunker, Division Director** **Compliance Division**	**Issue Date:** **06/13/2022** **Revision Date:** **N/A**

Manufacturer: Power Solutions International, Inc.
Engine Family: PPSIB18.3NGP
Mobile/Stationary Certification Type: Mobile and Stationary
Fuel : Natural Gas (CNG/LNG)
LPG/Propane
Emission Standards :
Mobile Part 1048
HC + NOx (g/kW-hr) : 2.7
NMHC + NOx (g/kW-hr) : 2.7
CO (g/kW-hr) : 4.4
Stationary Part 1048
HC + NOx (g/kW-hr) : 2.7
CO (g/kW-hr) : 4.4
NMHC + NOx (g/kW-hr) : 2.7
Part 60 Subpart JJJJ Table 1
VOC (g/Hp-hr) : 0.7
CO (g/Hp-hr) : 2.0
NOx (g/Hp-hr) : 1.0
Emergency Use Only : N

Pursuant to Section 213 of the Clean Air Act (42 U.S.C. section 7547) and 40 CFR Part 1048, 40 CFR Part 60, 1065, 1068, and 60 (stationary only and combined stationary and mobile) and subject to the terms and conditions prescribed in those provisions, this certificate of conformity is hereby issued with respect to the test engines which have been found to conform to applicable requirements and which represent the following nonroad engines, by engine family, more fully described in the documentation required by 40 CFR Part 1048, 40 CFR Part 60 and produced in the stated model year.

This certificate of conformity covers only those new nonroad spark-ignition engines which conform in all material respects to the design specifications that applied to those engines described in the documentation required by 40 CFR Part 1048, 40 CFR Part 60 and which are produced during the model year stated on this certificate of the said manufacturer, as defined in 40 CFR Part 1048, 40 CFR Part 60. This certificate of conformity does not cover nonroad engines imported prior to the effective date of the certificate.

It is a term of this certificate that the manufacturer shall consent to all inspections described in 40 CFR 1068.20 and authorized in a warrant or court order. Failure to comply with the requirements of such a warrant or court order may lead to revocation or suspension of this certificate for reasons specified in 40 CFR Part 1048, 40 CFR Part 60. It is also a term of this certificate that this certificate may be revoked or suspended or rendered void *ab initio* for other reasons specified in 40 CFR Part 1048, 40 CFR Part 60.

This certificate does not cover large nonroad engines sold, offered for sale, or introduced, or delivered for introduction, into commerce in the U.S. prior to the effective date of the certificate.

Power Solutions International, Inc.
201 Mittel Drive
Wood Dale, IL 60191
www.psiengines.com

0 Hour Non-Deteriorated Emissions Data for Permitting Customers

PSI EPA Engine Family XPSIB18.3NGP "X" denotes generic model year

PSI Engine Model Description PSI-NGE 18.3L Turbo Emrgency or Non-Emergency Stationary

	18.3L LPG	18.3L NG
Displacement	18.3L	18.3L
Test RPM	1800	1800
	g/KW-hr	**g/HP-hr**
BSCO	0.20	0.21
BSCO2	777.32	441.00
BSCH4	0.00	0.56
BSTHC	0.04	NA
BSNMHC	NA	0.00
BSNOx	0.06	0.03
BSTHC+NOx	0.1	NA
BSNMHC+NOx	NA	NA
BSFC (kg/kw-hr)	0.259	0.217

Weighted compositie emissions from ISO 8178 D2 (LPG) & D1 (NG) test cycles
BSFC is the weighted composite fuel consumption over the emission test cycle
LPG Emission Data Units in g/KW-hr
NG Emission Data Units in g/HP-hr

SK36241A

Gas Generator Set

MTU 10V0183 GS350

350 kWe/60 Hz/Standby/208 - 600V
Reference MTU 10V0183 GS350 (300 kWe) for Prime Rating Technical Data

System ratings

Voltage (L-L)	240V †	208V †	240V †	480V †	600V
Phase	1	3	3	3	3
PF	1	0.8	0.8	0.8	0.8
Hz	60	60	60	60	60
Natural Gas (NG)					
Amps	1,438	1,214	1,052	526	421
kW/kVA	345/345	350/437	350/437	350/437	350/437
Liquid Propane (LP)					
Amps	1,000	850	737	368	295
kW/kVA	240/240	245/306	245/306	245/306	245/306
NG and LP					
skVA@30% voltage dip	700	930	930	1,238	1,100
Generator model *	573RSL4035	433CSL6216	433CSL6216	433CSL6216	433PSL6248
Temp rise	130 °C/40 °C	130 °C/40 °C	130 °C/40 °C	130 °C/40 °C	130 °C/40 °C
Connection	12 LEAD DOUBLE DELTA	12 LEAD LOW WYE	12 LEAD HI DELTA	12 LEAD HI WYE	4 LEAD WYE

* Consult the factory for alternate configuration.

† UL 2200 offered

Certifications and standards

- Generator set is designed and manufactured in facilities certified to standards ISO 9001:2008 and ISO 14001:2004
- UL 2200 - optional (refer to *System ratings* for availability)
- CSA - optional
  - CSA C22.2 No. 100
  - CSA C22.2 No. 14
- Performance Assurance Certification (PAC)
  - Generator set tested to ISO 8528-5 for transient response
  - Verified product design, quality and performance integrity
  - All engine systems are prototype and factory tested
- Power rating
  - Accepts rated load in one step per NFPA 110

A Rolls-Royce solution

Standard features *

- MTU is a single source supplier
- Global product support
- 2 year standard warranty
- 18.3L turbo engine charge air cooling
  - 18.3 liter displacement
  - 4-cycle
- 3-way catalyst
- Optional fuel system: NG and LP vapor dual fuel
- Engine-generator resilient mounted
- Complete range of accessories
- Cooling system
  - Integral set-mounted
  - Engine-driven fan
- Generator
  - Brushless, rotating field generator
  - 2/3 pitch windings
  - 300% short circuit capability with Permanent Magnet Generator (PMG)
    - ◊ PMG Standard for 570 frame and larger
    - ◊ PMG Optional for 430 frame and smaller
- Digital control panel(s)
  - UL recognized, CSA certified, NFPA 110
  - Complete system metering
  - LCD display

Standard equipment *

Engine

- Air cleaner
- Oil pump
- Oil drain extension and S/O valve
- Full flow oil filter
- Jacket water pump
- Thermostats
- Blower fan and fan drive
- Radiator - unit mounted
- Electric starting motor - 24V
- Governor – electronic isochronous
- Base - formed steel
- SAE flywheel and bell housing
- Charging alternator - 24V
- Battery box and cables
- Flexible fuel connectors
- Flexible exhaust connection
- EPA certified engine

Generator

- NEMA MG1, IEEE, and ANSI standards compliance for temperature rise and motor starting
- Sustained short circuit current of up to 300% of the rated current for up to 10 seconds (with PMG only)
- Self-ventilated and drip-proof
- Superior voltage waveform
- Solid state, volts-per-hertz regulator (Digital when PMG is standard)
- ±1% voltage regulation no load to full load
- Brushless alternator with brushless pilot exciter
- 4 pole, rotating field
- 130 °C maximum standby temperature rise
- 1-bearing, sealed
- Flexible coupling
- Full amortisseur windings
- 125% rotor balancing
- 3-phase voltage sensing
- 100% of rated load - one step
- 5% maximum total harmonic distortion

Digital control panel(s)

- Digital metering
- Engine parameters
- Generator protection functions
- Engine protection
- SAE J1939 engine ECU communications
- Windows®-based software
- Multilingual capability
- Remote communications to RDP-110 remote annunciator
- Programmable input and output contacts
- UL recognized, CSA certified, CE approved
- Event recording
- IP 54 front panel rating with integrated gasket
- NFPA 110 compatible

* Represents standard product only. Consult the factory/MTU Distributor for additional configurations.

Application data

Engine

Manufacturer	PSI HD
Model	18.3L CAC
Type	4-cycle
Arrangement	10-V
Displacement: L (in³)	18.3 (1,115)
Bore: cm (in)	12.8 (5.04)
Stroke: cm (in)	14.2 (5.59)
Compression ratio	10.5:1
Rated rpm	1,800
Engine governor	Bosch
Maximum power (NG): kWm (bhp)	400 (536)
Maximum power (LP): kWm (bhp)	297 (398)
Speed regulation	± 0.5%
Air cleaner	dry

Liquid capacity (Lubrication)

Total oil system: L (gal)	42.1 (11.1)
Engine jacket water capacity: L (gal)	50 (11)
System coolant capacity: L (gal)	289 (63.5)

Electrical

Electric volts DC	24
Cold cranking amps under -17.8 °C (0 °F)	1,050

Fuel inlet

Fuel supply connection size	3" NPT
Fuel supply pressure: mm H_2O (in. H_2O)	178–279 (7–11)

CONTRACTOR RESPONSIBLE FOR NG(NATGAS) FUEL LEVEL GAUGE FROM 0 TO 25 INCHES OF WATER COLUMN PRESSURE. IDEAL NG (NATGAS) PRESSURE IS 10 TO 11 INCHES. THIS MUST BE INSTALLED AT THE BASE FRAME NEAR THE FUEL INLET.

Fuel consumption (NG-1000 BTU/ft³ / LP-2500 BTU/ft³)

	NG	LPG
At 100% of power rating: m³/hr (ft³/hr)	99.1 (3,498.8)	32.5 (1,145.9)
At 75% of power rating: m³/hr (ft³/hr)	77.2 (2,726.7)	27.7 (977.1)
At 50% of power rating: m³/hr (ft³/hr)	54.2 (1,913.7)	18.7 (658.5)

Cooling - radiator system

	NG and LPG
Ambient capacity of radiator: °C (°F)	50 (122)*
Maximum restriction of cooling air: intake and discharge side of radiator: kPa (in. H_2O)	0.12 (0.5)
Water pump capacity: L/min (gpm)	660 (174)
Heat rejection to coolant: kW (BTUM)	365 (20,784)
Heat radiated to ambient: kW (BTUM)	88.5 (5,030)
Fan power: kW (hp)	20.9 (28)

* Installation of enclosures reduces the ambient capacity of the cooling system by 1 °C (1.8 °F). Gravity exhaust louvers reduce ambient capacity of the cooling system by an additional 3 °C (5.5 °F).

TOTAL MAKE UP AIR REQUIREMENT FOR PROPER COOLING AND COMBUSTION

Air requirements

	NG and LPG
Aspirating: *m³/min (SCFM)	19.4 (664)
Air flow required for radiator cooled unit: **m³/min (SCFM)	1,019 (36,000)
Remote cooled applications; air flow required for dissipation of radiated generator set heat for a maximum of 25 °F rise: *m³/min (SCFM)	321 (11,350)

* Air density = 1.184 kg/m³ (0.0739 lbm/ft³)
** At 0.25 kPa (1 in. H_2O) static pressure and 52 °C (125 °F) at radiator

Exhaust system

	NG and LPG
Gas temp. (stack): °C (°F)	607 (1,125)
Gas volume at stack temp: m³/min (CFM)	58.6 (2,070)
Maximum allowable back pressure at outlet of engine, before piping: kPa (in. H_2O)	2.5 (10.25)

CAUTION - DUE TO EXTREME HEAT OUTPUT OF EXHAUST SYSTEM, MUFFLER AND EXHAUST PIPING SHOULD BE WRAPPED AND INSULTED BY A LICENSED MECHANICAL CONTRACTOR. ROOF AND WALL THIMBLES TO BE PROVIDED BY OTHERS AND MUST MEET HEAT REQUIREMENTS

Weights and dimensions

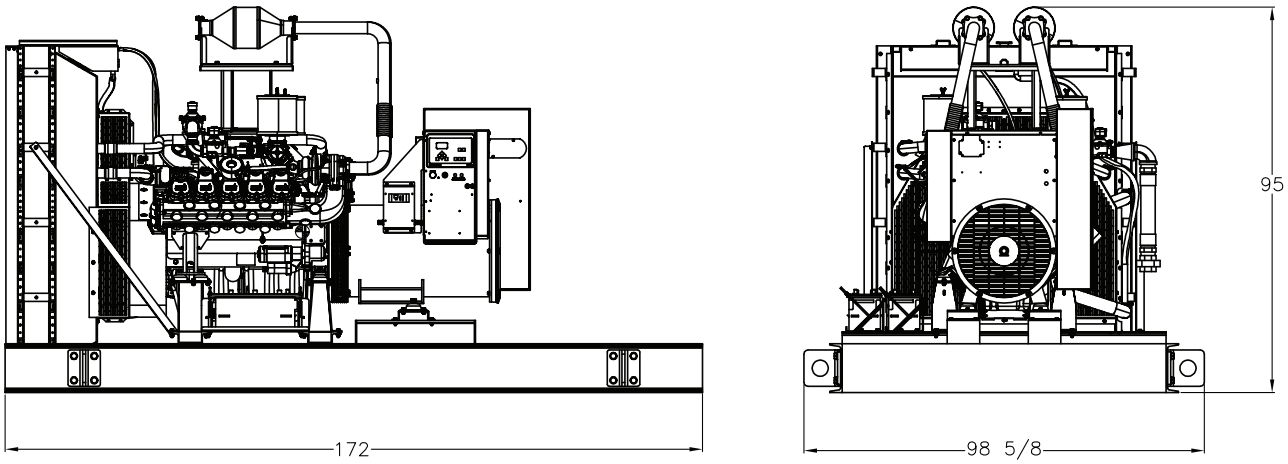

Drawing above for illustration purposes only, based on standard open power 480 volt generator set. Lengths may vary with other voltages. Do not use for installation design. See website for unit specific template drawings.

System	Dimensions (L x W x H)	Weight (dry)
Open power unit (OPU)	4,369 x 2,506 x 2,413 mm (172 x 98.6 x 95 in)	4,741 kg (10,452 lb)

Weights and dimensions are based on open power units and are estimates only. Consult the factory for accurate weights and dimensions for your specific generator set.

Sound data

Unit type	Standby full load (NG)	Standby full load (LP)
Level 0: Open power unit: dB(A)	85.1	84.8

Sound data is provided at 7 m (23 ft). Generator set tested in accordance with ISO 8528-10 and with infinite exhaust.

Emissions data

Fuel type	THC + NO_x	CO
Natural gas	0.59	0.21
Liquid propane	0.07	0.15

- All units are in g/hp-hr and are EPA weighted cycle values. Emission levels of the engine may vary with ambient temperature, barometric pressure, humidity, fuel type and quality, installation parameters, measuring instrumentation, etc. The data was obtained in compliance with US EPA regulations.

Rating definitions and conditions

- Ambient capability factor at 984 ft (300 m). Consult your local MTU Distributor for other altitudes.
- Standby ratings apply to installations served by a reliable utility source. The standby rating is applicable to varying loads for the duration of a power outage. No overload capability for this rating. Ratings are in accordance with ISO 3046-1, BS 5514, and AS 2789. Average load factor: ≤ 85%.
- Consult your local MTU Distributor for derating information.

Collicutt Energy Services, Inc.
12349 Hawkins St.
Santa Fe Springs, CA 90670
Office: 562-944-4413
Fax: 562-944-4415

Tony Miccolis (310) 245-0292

Subject to change. | 23480 | 2020-02

PERMIT APPLICATION
B/333 EMERGENCY GENERATOR

OCTOBER 2023

Prepared for:
NORTHROP GRUMMAN CORPORATION
Palmdale, California

Prepared by:
VERDANT ENVIRONMENTAL
South Pasadena, California

TABLE OF CONTENTS

1

Permit Application Forms 1

2

Process Description.....2
- Introduction 2
- Equipment Description 2
- Operating Schedule.....2

3

Emission Calculations.....3
- Criteria Pollutant Emissions 3
- HAP Emissions.....3

4

Rule Compliance Evaluation 4

5

Fee Evaluation.....7

TABLES

Table 1 Potential to Emit NOx, CO and VOC
Table 2 Potential to Emit PM and SO2
Table 3 Potential to Emit TACs

APPENDICES

Appendix A Manufacturer's Data

1

PERMIT APPLICATION FORMS

ANTELOPE VALLEY AIR QUALITY MANAGEMENT DISTRICT
2551 West Ave H, Suite 102, Lancaster, CA 93536
Phone (661) 723-8070
www.avaqmd.ca.gov

APPLICATION FOR INTERNAL COMBUSTION ENGINE (I.C.E.) ONLY

PLEASE TYPE OR PRINT

Please refer to Rule 301 for Application Filing Fee.

Section 1: Facility/Owner Information

a. Permit To Be Issued To (Company Name): Palmdale Aircraft Integration Center of Excellence	b. Federal Tax ID #: 95-1055798
c. Mailing/Billing Address (for above company name): 3520 E Avenue M, M/S 4F	
d. Facility or Business License Name (for equipment location): Northrop Grumman Systems Corporation	
e. Facility Address - Location of Equipment (if same as for company, enter "Same"): Same	Facility UTM or Lat/Long: 425E/3830N

f. Contact Name/Title: George Jung	Email Address: george.jung@ngc.com	Phone/Fax #.: 661-266-5394

g. General Nature of Business:

Type of Organization (check one):
☐ Individual Owner ☐ Partnership ■ Corporation ☐ Utility ☐ Local Agency ☐ State Agency ☐ Federal Agency

Section 2: Nature of Application

Application is hereby made for Authority To Construct (ATC) and Permit To Operate (PTO) the following equipment:
B/333 300 kWe (472 bhp) LPG-fired emergency generator

Application is for: ■ New Construction ☐ Modification ☐ Change of Owner	For modification or change of owner: Current Permit Number: replacement for E006780

Do you claim Confidentiality of Data? ■ No ☐ Yes (attach explanation; specify which information provided is confidential)

Section 3: Equipment Information

Engine Function: ☐ Prime ■ Emergency ☐ Low-Use (<80 hr/yr) ☐ Portable ☐ Stand-by (used only when a permitted prime unit is down for maintenance or repair)

Engine Manufacturer: PSI	Engine Model: 21.9L CAC (Gen Set MTU 12V0183 GS400)	Engine Serial Number: TBD

Year of Manufacture: 2024 pending release	Date Installed:

Rating (BHP): 472	Speed (RPM): 1,800	Number of Cylinders: 12

Fuel Type: ☐ CARB Diesel ☐ Natural Gas ■ Propane/LPG ☐ Gasoline ☐ Digester Gas ☐ Landfill Gas
☐ Other (specify):_____

Alternate Fuel (if applicable) specify: (e.g. Propane backup for Natural Gas engine)

Engine Meter: ■ Hour Meter ☐ Dedicated Fuel Meter ☐ None

Cycle Type: ☐ two cycle ■ four cycle	Combustion Type: ■ Rich Burn ☐ Lean Burn

Check all that apply: ☐ Naturally Aspirated ■ Turbocharged ■ Aftercooled ☐ Intercooled ☐ Injection Timing Retarded
☐ Air to Fuel Ratio Controller ☐ Smoke Puff Limiter ☐ Electronic Control Module ☐ Staged Combustion ☐ Direct Fuel Injection
☐ Pre-Combustion Chamber ☐ Piston Scavenging

Add-on Emission Control Technology: ☐ No ■ Yes: Attach Manufacturer's specifications, CARB Certification or Source Test Data			
If yes: Manufacturer:	Model:	Serial #:	CARB EO#:
Type: ☐ SCR ☐ Non-S CR ☐ Particulate Trap ☐ EGR ☐ Oxidation Catalyst ■ Other (specify): 3-way catalyst			
Stack Data: Exhaust Stack Height from Ground: 10 feet		Exhaust Stack Diameter: feet	
Stack is: ☐ horizontal ■ vertical ☐ open ■ weather cap			
Exhaust Vent Data: Exhaust Temp: 1356 °F		Maximum Exhaust Rate: 2995 CFM	

Section 4: Emissions Data

Emission Factor Basis: ■ Manufacturer ☐ Source Test ☐ AVAQMD Default ☐ USEPA AP-42

☐ Other (please specify): _____

USEPA Family Name: PPSIB21.9NGP CARB Executive Order Number: _____

Emissions Data: If no add-on controls are installed, enter "same" in Post Control Max. Emissions column

Pollutant	Pre-Control Max. Emissions	Units	Post Control Max. Emissions	Units
NOx	0.032 g/kW-hr			
NMHC	0.047 g/kW-hr			
CO	0.337 g/kW-hr			
PM10				
SOx				

Section 5: Powered Item

This ICE is used to power:

■ Electrical Generator ☐ Compressor ☐ Pump ☐ Paint Spray Gun ☐ Conveyor or Drive ☐ Fire Pump

☐ Other (specify): _____

PERP Registration Number (if applicable):

Manufacturer: Model: Serial #: Size/Rating:

Section 6: Operation Information

Fuel Consumption at Maximum Rated Load: ■ gal/hour ☐ SCF/hour ☐ MMBtu/hr

Typical Load: % of Maximum Rated Load

Facility Annual Throughput by Quarters (percent):	Expected Operating Hours of IC Engine:
■ Uniform OR _____% Jan-Mar _____% Apr-Jun	_____Hours/Day _____Days/Week _____Weeks/Year
_____% Jul-Sep _____% Oct-Dec	_____Total Annual Hours

Section 7: Receptor Information

Distance (Feet) and direction to the property line of closest: Residence: see HRA Business: School:

Name of Closest School (K-12):

If the proposed ICE operates within 1,000 feet of a school site and operation results in the emission of hazardous air pollutants, a public notice will be required at the expense of the applicant (CA H&S §42301.6)

*Please note, District Staff may contact you for further information. Failure to provide additional information as requested in a timely manner may result in delays in the processing of this permit application.

Section 8: Certification

I hereby certify that all information contained herein is true and correct.

George Jung	Environmental		10/04/2023
Name of Responsible Official	Official Title	Signature of Responsible Official	Date Signed

Telephone Number: 661-266-5394	Email: george.jung@ngc.com

-For District Use only-

Application Number:	Invoice Number:	Permit Number:	Company/Facility Number

ANTELOPE VALLEY AIR QUALITY MANAGEMENT DISTRICT
2551 West Ave H, Suite 102, Lancaster, CA 93536
Phone (661) 723-8070
www.avaqmd.ca.gov

APPLICATION FOR INTERNAL COMBUSTION ENGINE (I.C.E.) ONLY

Application Submittal Instructions

1) Submit completed application to engineering@avaqmd.ca.gov

2) Pay the corresponding application fee via check or credit card

Payment by check:
Make check payable to: Antelope Valley AQMD
Mail the check with a copy of this completed application to:
Antelope Valley AQMD 2551 West Ave H, Suite 102, Lancaster, CA 93536

Payment by credit card:
Pay online at our website: http://www.avaqmd.ca.gov
Click "Pay Fees"
Please note a surcharge applies for all credit card payments.

If payment is made online via credit card, please email the receipt to engineering@avaqmd.ca.gov.

Should you have any additional questions, please, do not hesitate to contact the permitting division at 661-723-8070, or via email at engineering@avaqmd.ca.gov.

2

PROCESS DESCRIPTION

INTRODUCTION

Northrop Grumman Corporation (Northrop Grumman) is planning to install a new emergency generator at B/333, Site 3, AFP42. The equipment will be used as backup power for the building and is a replacement for E006780, which will be removed from service. This location is part of the Northrop Grumman Facility ID No. 01816 and this equipment will be incorporated into the Northrop Grumman Title V permit.

EQUIPMENT DESCRIPTION

The unit is a Power Solution International (PSI) Engine Model PSI-21.9L CAC LP (Gen Set MTU 12V0183 GS400). The engine is rated at 300 kWe and it is powered by a 472 BHP Rolls Royce engine. It is fueled with liquid propane and equipped with a 3-day catalyst. Manufacturer's information is included as Appendix A.

OPERATING SCHEDULE

The unit is an emergency engine and will be operated not more than 50 hours per year for maintenance and testing.

3

EMISSION CALCULATIONS

CRITERIA POLLUTANT EMISSIONS

Proposed equipment potential to emit, as defined by District Rule 3001(W), is the maximum capacity of the emission unit to emit any regulated air pollutant under its physical and operational design. Pursuant to AQMD policy, only maintenance and testing emissions are included in the proposed emission calculation for emergency generators. Emission factors for NO_x, CO and VOC are as provided by the manufacturer with emissions calculated in Table 1. SO_2 and PM emissions, calculated using AVAQMD default emissions factors for 4 stroke rich burn engines, are included in Table 2.

HAP EMISSIONS

Hazardous Air Pollutant (HAP) emissions, also calculated based on maintenance and testing hours and AVAQMD default emission factors, are included in Table 3.

EMISSIONS FROM ENGINE E006780

The new equipment is a replacement for E006780, which will be removed from service. Emissions from E006780 for maintenance and testing for the past 5 years are included in Table 4.

4

RULE COMPLIANCE EVALUATION

Rule 401 – Visible Emissions

Rule 401 limits visible emissions opacity to less than 20 percent (or Ringelmann No. 1). During start up, visible emissions may exceed 20 percent opacity. However, emissions of this opacity are not expected to last three minutes or longer. In normal operating mode, visible emissions are not expected to exceed 20 percent opacity.

Rule 404 – Particulate Matter – Concentration

Rule 404 specifies standards of emissions for particulate matter concentrations. The use of an engine fueled with LPG achieves compliance with Rule 404.

Rule 405 – Solid Particulate Matter - Weight

Rule 405 limits particulate matter emissions from fuel combustion on a mass per unit combusted basis. The use of an engine fueled with LPG achieves compliance with Rule 405.

Rule 1110.2 - Emissions from Stationary, Non-road & Portable Internal Combustion Engines

Engine units will be limited to use for emergency power, defined as when utility power is not available. A non-resettable operating hour meter will be installed and maintained on each engine unit to indicate elapsed engine operating time. Compliance with Rule 1110.2 will be achieved.

Regulation XIII – New Source Review

<u>Rule 1303 – BACT</u>

Rule 1303 (A) mandates BACT for:

- Any new Permit Unit which emits, or has the Potential to Emit, 25 pounds per day or more of any Nonattainment Air Pollutant; or

- Any new or Modified Facility which emits, or has the Potential to Emit, 25 tons per year or more of any Nonattainment Air Pollutant

As the Northrop Grumman facility has the potential to emit 25 tons per year or more of NOx, BACT is required. The use of an LPG-fired engine equipped with a 3-way catalyst and used for emergency operation meets the requirement for BACT. Compliance with Rule 1303 (A) is achieved.

Rule 1303– Offsets

New Source Review requires offsets for non-attainment pollutants and their precursors emitted by the addition of new equipment or modifications resulting in a net increase at existing major sources. The Northrop facility is an existing major source of VOC; however, the facility has a monthly VOC limit of 118,625 pounds in any 30-day period based on a 30-day rolling average that has been fully offset. This equipment will operate within the existing limit and there will, therefore, be no net increase in VOC emissions.

Offsets will be required for NOx at a rate of 1.3:1. A total of 2 pounds of NOx Emission Reduction Credits (ERCs) will be from the Engine E006780 shutdown calculated in Table 4 to offset the 1.24-pound increase in NOx emissions. The remaining ERCs from this shutdown will be used to offset the Lift Station engine replacement project associate with this permit action.

40 CFR 60 Subpart JJJJ - Standards of Performance for Stationary Spark Ignition Internal Combustion Engines

40 CFR 60 Subpart JJJJ applies to this unit as follows: §60.4230 (a)(4)(iv) Owners and operators of stationary SI ICE that commence construction after June 12, 2006, where the stationary SI ICE are manufactured on or after January 1, 2009, for emergency engines with a maximum engine power greater than 19 KW (25 HP).

§60.4233 (e) Owners and operators of stationary SI ICE with a maximum engine power greater than or equal to 75 KW (100 HP) (except gasoline and rich burn engines that use LPG) must comply with the emission standards in Table 1 to this subpart for their stationary SI ICE.

Table 1 to Subpart JJJ of Part 60 requires the following emission rates for engines with a HP rating of >130:

Pollutant	Emission rate
NOx	2.0 g/HP-hr (160 ppmvd@15% O2)
CO	4.0 g/HP-hr (540 ppmvd@15% O2)
VOC	1.0 g/HP-hr (86 ppmvd@15% O2)

The unit Northrop Grumman is planning to install has the following emission rates:

Pollutant	Emission rate
NOx	0.032 g/kW-hr (0.0235 g/bhp)
CO	0.337 g/kW-hr (0.251 g/bhp)
VOC	0.047 g/kWh-hr (0.035 g/bhp)

Compliance with the requirements of 40 CFR 60 Subpart JJJJ is achieved.

40 CFR 63 Subpart ZZZZ - National Emissions Standards for Hazardous Air Pollutants for Stationary Reciprocating Internal Combustion Engines

Pursuant to § 63.6590 (c) for stationary RICE subject to regulations under 40 CFR Part 60, an affected source that is a new emergency spark-ignition stationary RICE with a site rating of less than or equal to 500 brake HP located at a major source of HAP emissions meets the requirements of this part by meeting the requirements of 40 CFR part 60 subpart JJJJ. No further requirements apply to the engine under this part.

AVAQMD Rule 1401 - New Source Review for Toxic Air Contaminants

Rule 1401 establishes allowable risks for equipment requiring new permits pursuant to Rules 201 or 203. To demonstrate compliance with Rule 1401, a risk assessment was prepared and submitted with this application.

5

FEE EVALUATION

Pursuant to Rule 301 (D) (1) any person who applies for the issuance of a new or modified permit and subject to the Provisions of Regulation XXX – Federal Operating Permits (Title V) shall be assessed a fee of $1008. This application filing fee is submitted with the application.

Total application fees included with this application are as follows:

Emergency generator permit application x $1008 = $1008

TABLES

Table 1: Potential to Emit NOx CO and VOC

	Max	Emission Rate (g/KW-hr)			PTE (lbs/year)		
Op_Hours	**kWm**	**NOx**	**CO**	**VOC**	**NOx**	**CO**	**VOC**
50	352	0.032	0.337	0.047	1.24	13.06	1.82

Emission rates from Power Solution International for PSI EPA Engine Family PPSIB18.3NGP for LPG fuel

Table 2: Potential to Emit PM and SO2

Max Fuel Use gal/hr	Max Operation hr/yr	Max Fuel Use 1000 gals	Pollutant	Emission Factor lb/1000 gals	Emissions (pounds)	
					Max Hourly	Max Annual
38.44	50	1.92	PM	5.00	0.19	9.61
			SO2	0.35	0.01	0.67

Max fuel use:
At 100% of power rating for LPG =1,407 ft^3/hr
Heating value of LP = 2500 BTU/ft^{-3}
Heating value of propane = 91,500 BTU/gal

Table 3: Potential to emit TACs

Max Fuel Use gal/hr	Max Operation hr/yr	Max Fuel Use 1000 gals	Pollutant	CAS	Emission Factor lb/1000 gals	Emissions (pounds)	
						Max Hourly	Max Annual
38.44	50	1.92	1,1 - Dichloroethane	75343	1.03E-03	3.97E-05	1.99E-03
			1,1,2 - Trichloroetrhane	79005	1.40E-03	5.38E-05	2.69E-03
			1,1,2,2 - Tetrachloroethane	79345	2.31E-03	8.90E-05	4.45E-03
			1,2 - Dichloropropane	78875	1.19E-03	4.57E-05	2.29E-03
			1,3 - Dichloropropene	542756	1.16E-03	4.47E-05	2.23E-03
			1,3-Butadiene	106990	6.07E-02	2.33E-03	1.17E-01
			Acenaphthene	83329	1.78E-04	6.82E-06	3.41E-04
			Acenaphthylene	208968	1.33E-03	5.10E-05	2.55E-03
			Acetaldehyde	75070	2.55E-01	9.81E-03	4.91E-01
			Acrolein	107028	2.41E-01	9.25E-03	4.63E-01
			Benzene	71432	1.75E-01	6.72E-03	3.36E-01
			Benzo(b)fluoranthenen	205992	2.17E-05	8.34E-07	4.17E-05
			Benzo(g,h,l)perylene	191242	1.78E-05	6.86E-07	3.43E-05
			Benzo(k)fluoranthene	207089	9.42E-06	3.62E-07	1.81E-05
			Butyr/Isobutyaldehyde	78842	4.45E-03	1.71E-04	8.55E-03
			Carbon tetrachloride	56235	1.62E-03	6.23E-05	3.11E-03
			Chlorobenzene	108907	1.18E-03	4.54E-05	2.27E-03
			Chloroform	67663	1.25E-03	4.82E-05	2.41E-03
			Chrysene	218019	2.84E-05	1.09E-06	5.45E-05
			Ethyl benzene	100414	2.27E-04	8.72E-06	4.36E-04
			Ethylene dibromide	106934	1.95E-03	7.49E-05	3.75E-03
			Ethylene Dichloride	107062	1.03E-03	3.97E-05	1.99E-03
			Fluoranthene	206440	9.10E-05	3.50E-06	1.75E-04
			Fluorene	86737	6.32E-04	2.43E-05	1.22E-03
			Formaldehyde	50000	1.88E+00	7.21E-02	3.61E+00
			Methanol	67561	2.80E-01	1.08E-02	5.38E-01
			Methylene chloride	74953	3.77E-03	1.45E-04	7.25E-03
			Naphthalene	91203	8.88E-03	3.42E-04	1.71E-02
			PAH *	1150	1.29E-02	4.96E-04	2.48E-02
			Phenanthrene	85018	6.47E-04	2.49E-05	1.24E-03
			Propylene	115071	1.46E+00	5.63E-02	2.81E+00
			Pyrene	129000	1.64E-04	6.30E-06	3.15E-04
			Styrene	100425	1.09E-03	4.19E-05	2.09E-03
			Toluene	108883	5.11E-02	1.96E-03	9.81E-02
			Vinyl chloride	75014	6.57E-04	2.53E-05	1.26E-03
			Xylenes	1330207	1.78E-02	6.86E-04	3.43E-02

Table 4: VOC and NOx Emission reduction from the shutdown of Engine E006780

Model Name	Year	Proc Rate mgal	Maint/Total Hours Ratio	Maint PR mgal	NOx_EF lb/mgal	VOC_EF lb/mgal	NOx lb	VOC lb	Maint NOx lb	Maint VOC lb
EG05-Stationary DF2 Emer Gen; E006780	2018	0.0263	0.3178	0.0084	260	12.33	6.84	0.32	2.17	0.103
	2019	0.1518	0.4590	0.0697	260	12.33	39.47	1.87	18.12	0.859
	2020	0.0395	0.9831	0.0388	260	12.33	10.27	0.49	10.10	0.479
	2021	0.0444	1.0000	0.0444	260	12.33	11.54	0.55	11.54	0.547
	2022	0.0681	1.0000	0.0681	260	12.33	17.71	0.84	17.71	0.840

Appendix A

MANUFACTURERS DATA

PS SPEC™ Power System Sizing and Specification

Northrup 333

Model: mtu 12V0183 GS400 (Qty 1) Sizing: Loads not considered

A Rolls-Royce solution

9/14/2023

Sizing Prepared By:
Vern Booth
United States of America

For:

Project Overview

Voltage	277/480V	**Fuel Type**	Liquid Propane
Frequency	60 Hz	**Rating Type**	Standby
Phase	Three Phase	**Site Elevation**	762 m (2500 ft)
Product Type	Standard	**Ambient Temperature[8]**	41°C (105°F)
		Permitted Back Pressure	50 mbar (20.1 in. H_2O)

Load Analysis Summary

Peak kVA	NA[4]	**Running kVA**	NA[4]	**Load Factor %**	0
Peak kW	NA[4]	**Running kW[6]**	NA[4]		
		Running PF	NA[4]		

Generator Set Details

Generator Set Model	mtu 12V0183 GS400 (Qty 1)	**Nameplate kW Rating**	295
Alternator Model	572RSL4029 w/ PMG	**Rated P.F.**	0.8
Temperature Rise	130°C	**Site kW Rating[7]**	274
Engine Model	21.9L CAC Standby LP		

Block Load Transient Response[3]				Alternator Motor Starting[2]	
Load Change	**FDip**	**VDip**	**Recovery Times**	**VDip**	**SkVA**
0-25 %	2.1%	3.2%	0.7s	**10%**	730
0-50 %	3.8%	7%	1.8s	**20%**	1460
0-75 %	5.7%	11.3%	3s	**30%**	2190
0-100 %	8.4%	16%	2.8s	**35%**	2555

Technical Data at 100% Nameplate Rated Load[1]

Make	PSI	**Governor**	Electronic Isochronous (Bosch)
Model	mtu 12V0183 GS400 (Qty 1)	**Cooling Pkg Ambient Rating**	50°C (122°F)
Aspiration	TurboCharged	**Cooling Pkg Airflow**	1133 m^3/min (40012 ft^3/min)
Cylinder Configuration	12-V	**Heat Rejection to Coolant**	453 kW (25762 BTU/min)
Displacement	21.9 L (1336 in^3)	**Heat Rejection to CAC**	53 kW (3037 BTU/min)
Rated RPM	1,800	**Heat Rejection to Fuel**	NA[4]
Fuel Consumption	39.8 m^3/hr (1407 ft^3/hr)	**Heat Radiated to Ambient**	CF[5]
Aspiration Airflow	25 m^3/min (869 ft^3/min)	**Exhaust Stack Temperature**	732°C (1350°F)
Emissions Rating	EPA	**Exhaust Flow Rate**	85 m^3/min (2995 ft^3/min)

1. Based on standard conditions of 77 °F, 1000 ft. elevation, 0.5" H_2O intake restriction. Exhaust Flow Rate is evaluated using Stack Temperature.
2. Based on instantaneous voltage dip as defined per NEMA MG-1.
3. Recovery time is based on steady state recovery of voltage. Block load percentage is based on Nameplate kW rating. This information is based on average performance, and should not be considered a guarantee. Results may vary based on production tolerances and site conditions. Consult Rolls-Royce Solutions America Inc. for further information regarding transients.
4. NA = Not Applicable **5**. CF = Consult Factory **6**. The average running load on diesel engines should not be less than 30% of rated power.
7. Site kW Rating is the maximum sustainable kW at the project site conditions. Note that the Starting kW can be higher.
8. Engine intake air temperature is based on ambient temperature. Additional installation preheat is not considered for calculated derate performance.

Disclaimer/Explanation:All information provided in this program is provided for information purposes only and does not constitute a legal contract between Rolls-Royce Solutions America Inc. and any person(s) or entity unless otherwise specified.

Version: 14.1.23.515/20230914

Power Solutions International, Inc.
201 Mittel Drive
Wood Dale, IL 60191
www.psiengines.com

0 Hour Non-Deteriorated Emissions Data for Permitting Customers

PSI EPA Engine Family XPSIB21.9NGP "X" denotes generic model year

PSI Engine Model Description PSI-NGE 21.9L Turbo Emrgency or Non-Emergency Stationary

	22L LPG	22L NG**
Displacement	22L	22L
Test RPM	1800	1800
	g/KW-hr	**g/HP-hr**
BSCO	0.337	0.198
BSCO2	881.3	462.700
BSCH4	0.00	0.015
BSTHC	0.047	NA
BSNMHC	NA	0.000
BSNOx	0.032	0.006
BSTHC+NOx	0.079	NA
BSNMHC+NOx	NA	NA
BSFC (kg/kw-hr)	0.2673	0.227

	22L LPG	22L NG
Displacement	22L	22L
Test RPM	1500	1500
	g/KW-hr	**g/HP-hr**
BSCO	0.282	0.064
BSCO2	811.95	433.970
BSCH4	0.00	0.307
BSTHC	0.026	NA
BSNMHC	NA	0.0029
BSNOx	0.052	0.079
BSTHC+NOx	0.078	NA
BSNMHC+NOx	NA	NA
BSFC (kg/kw-hr)	0.2635	0.2113

** Updated test data from 2015 testing

Weighted compositie emissions from ISO 8178 D2 (LPG) & D1 (NG) test cycles
BSFC is the weighted composite fuel consumption over the emission test cycle
LPG Emission Data Units in g/KW-hr
NG Emission Data Units in g/HP-hr

SK36242A

PERMIT APPLICATION
LIFT STATION EMERGENCY GENERATOR

OCTOBER 2023

Prepared for:
NORTHROP GRUMMAN CORPORATION
Palmdale, California

Prepared by:
VERDANT ENVIRONMENTAL
South Pasadena, California

TABLE OF CONTENTS

1

Permit Application Forms 1

2

Process Description.....2
- Introduction 2
- Equipment Description 2
- Operating Schedule.....2

3

Emission Calculations.....3
- Criteria Pollutant Emissions 3
- HAP Emissions.....3
- Emissions from Engine E006783 3

4

Rule Compliance Evaluation 4

5

Fee Evaluation.....7

TABLES

Table 1 Potential to Emit NOx, CO and VOC
Table 2 Potential to Emit PM and SO2
Table 3 Potential to Emit TACs
Table 4 VOC and NOx Emission reduction from the shutdown of Engine E006780

APPENDICES

Appendix A Manufacturer's Data

1

PERMIT APPLICATION FORMS

ANTELOPE VALLEY AIR QUALITY MANAGEMENT DISTRICT
2551 West Ave H, Suite 102, Lancaster, CA 93536
Phone (661) 723-8070
www.avaqmd.ca.gov

APPLICATION FOR INTERNAL COMBUSTION ENGINE (I.C.E.) ONLY

PLEASE TYPE OR PRINT

Please refer to Rule 301 for Application Filing Fee.

Section 1: Facility/Owner Information

a. Permit To Be Issued To (Company Name): Palmdale Aircraft Integration Center of Excellence	b. Federal Tax ID #: 95-1055798
c. Mailing/Billing Address (for above company name) 3520 E Avenue M, M/S 4F	
d. Facility or Business License Name (for equipment location): Northrop Grumman Systems Corporation	
e. Facility Address - Location of Equipment (if same as for company, enter "Same"): Same	Facility UTM or Lat/Long: 425E/3830N

f. Contact Name/Title: George Jung	Email Address: george.jung@ngc.com	Phone/Fax #.: 661-266-5394

g. General Nature of Business: Aircraft manufacturing

Type of Organization (check one):
☐ Individual Owner ☐ Partnership ■ Corporation ☐ Utility ☐ Local Agency ☐ State Agency ☐ Federal Agency

Section 2: Nature of Application

Application is hereby made for Authority To Construct (ATC) and Permit To Operate (PTO) the following equipment:
350 kW propane fired emergency ICE

Application is for: ■ New Construction ☐ Modification ☐ Change of Owner	For modification or change of owner: Current Permit Number: _____

Do you claim Confidentiality of Data? ■ No ☐ Yes (attach explanation; specify which information provided is confidential)

Section 3: Equipment Information

Engine Function: ☐ Prime ■ Emergency ☐ Low-Use (<80 hr/yr) ☐ Portable ☐ Stand-by (used only when a permitted prime unit is down for maintenance or repair)

Engine Manufacturer: Rolls Royce.Power Solutions International	Engine Model: MTU 10V0183 GS350 18.3L CAC	Engine Serial Number:
Year of Manufacture: 2021	Date Installed:	
Rating (BHP): 297	Speed (RPM): 1800	Number of Cylinders: 4

Fuel Type: ☐ CARB Diesel ☐ Natural Gas ■ Propane/LPG ☐ Gasoline ☐ Digester Gas ☐ Landfill Gas
☐ Other (specify):_____

Alternate Fuel (if applicable) specify: (e.g. Propane backup for Natural Gas engine)

Engine Meter: ■ Hour Meter ☐ Dedicated Fuel Meter ☐ None

Cycle Type: ☐ two cycle ■ four cycle	Combustion Type: ■ Rich Burn ☐ Lean Burn

Check all that apply: ☐ Naturally Aspirated ■ Turbocharged ■ Aftercooled ☐ Intercooled ☐ Injection Timing Retarded
☐ Air to Fuel Ratio Controller ☐ Smoke Puff Limiter ☐ Electronic Control Module ☐ Staged Combustion ☐ Direct Fuel Injection
☐ Pre-Combustion Chamber ☐ Piston Scavenging

Add-on Emission Control Technology: ☐ No ■ Yes: Attach Manufacturer's specifications, CARB Certification or Source Test Data			
If yes: Manufacturer:	Model:	Serial #:	CARB EO#:
Type: ☐ SCR ☐ Non-S CR ☐ Particulate Trap ☐ EGR ☐ Oxidation Catalyst ■ Other (specify): 3-way catalyst			
Stack Data: Exhaust Stack Height from Ground: feet		Exhaust Stack Diameter: feet	
Stack is: ☐ horizontal ☐ vertical ☐ open ☐ weather cap			
Exhaust Vent Data: Exhaust Temp: 1125 °F	Maximum Exhaust Rate: 2070 CFM		

Section 4: Emissions Data

Emission Factor Basis: ■ Manufacturer ☐ Source Test ☐ AVAQMD Default ☐ USEPA AP-42

☐ Other (please specify): _____

USEPA Family Name: PPSIB18.3NGP CARB Executive Order Number: _____

Emissions Data: If no add-on controls are installed, enter "same" in Post Control Max. Emissions column

Pollutant	Pre-Control Max. Emissions	Units	Post Control Max. Emissions	Units
NOx			0.06	g/kW-hr
NMHC			0.04	g/kW-hr
CO			0.20	g/kW-hr
PM10	5	lb/1000 gals		
SOx	0.35	lb/1000 gals		

Section 5: Powered Item

This ICE is used to power:

■ Electrical Generator ☐ Compressor ☐ Pump ☐ Paint Spray Gun ☐ Conveyor or Drive ☐ Fire Pump

☐ Other (specify): _____

PERP Registration Number (if applicable):			
Manufacturer:	Model:	Serial #:	Size/Rating: 350 kW

Section 6: Operation Information

Fuel Consumption at Maximum Rated Load: ☐ gal/hour ☐ SCF/hour ☐ MMBtu/hr

Typical Load: % of Maximum Rated Load

Facility Annual Throughput by Quarters (percent):	Expected Operating Hours of IC Engine:
☐ Uniform OR ____% Jan-Mar ____% Apr-Jun	____Hours/Day ____Days/Week ____Weeks/Year
____% Jul-Sep ____% Oct-Dec	50 Total Annual Hours

Section 7: Receptor Information

Distance (Feet) and direction to the property line of closest: Residence: Business: School:

Name of Closest School (K-12):

If the proposed ICE operates within 1,000 feet of a school site and operation results in the emission of hazardous air pollutants, a public notice will be required at the expense of the applicant (CA H&S §42301.6)

*Please note, District Staff may contact you for further information. Failure to provide additional information as requested in a timely manner may result in delays in the processing of this permit application.

Section 8: Certification

I hereby certify that all information contained herein is true and correct.

George Jung	Environmental		10/04/2023
Name of Responsible Official	Official Title	Signature of Responsible Official	Date Signed

Telephone Number:	661 266-5394	Email:	george.jung@ngc.com

-For District Use only-

Application Number:	Invoice Number:	Permit Number:	Company/Facility Number

ANTELOPE VALLEY AIR QUALITY MANAGEMENT DISTRICT
2551 West Ave H, Suite 102, Lancaster, CA 93536
Phone (661) 723-8070
www.avaqmd.ca.gov

APPLICATION FOR INTERNAL COMBUSTION ENGINE (I.C.E.) ONLY

Application Submittal Instructions

1) Submit completed application to engineering@avaqmd.ca.gov

2) Pay the corresponding application fee via check or credit card

Payment by check:
Make check payable to: Antelope Valley AQMD
Mail the check with a copy of this completed application to:
Antelope Valley AQMD 2551 West Ave H, Suite 102, Lancaster, CA 93536

Payment by credit card:
Pay online at our website: http://www.avaqmd.ca.gov
Click "Pay Fees"
Please note a surcharge applies for all credit card payments.

If payment is made online via credit card, please email the receipt to engineering@avaqmd.ca.gov.

Should you have any additional questions, please, do not hesitate to contact the permitting division at 661-723-8070, or via email at engineering@avaqmd.ca.gov.

2

PROCESS DESCRIPTION

INTRODUCTION

Northrop Grumman Corporation (Northrop Grumman) is planning to install a new emergency generator at the Site 4 Lift Station, AFP42. The equipment will be used as backup power for the stormwater lift station and is a replacement for Engine E006783. This location is part of the Northrop Grumman Facility ID No. 01816 and this equipment will be incorporated into the Northrop Grumman Title V permit.

EQUIPMENT DESCRIPTION

The unit is a Power Solution International (PSI) Engine Model PSI HD 18.3L Turbo Engine Charge Air Cooling, EPA Engine Family XPSIB18.3NGP, 350 kWe. It is powered by a 398 BHP Rolls Royce engine Model MTU 10V0183 GS350 18.3L CAC**.** The unit is fueled with LPG and equipped with a 3-way catalyst.

OPERATING SCHEDULE

The unit is an emergency engine and will be operated not more than 50 hours per year for maintenance and testing.

3

EMISSION CALCULATIONS

CRITERIA POLLUTANT EMISSIONS

Proposed equipment potential to emit, as defined by District Rule 3001(W), is the maximum capacity of the emission unit to emit any regulated air pollutant under its physical and operational design. Pursuant to AQMD policy, only maintenance and testing emissions are included in the proposed emission calculation for emergency generators. Emission factors for NO_x, CO and VOC are as provided by the manufacturer with emissions calculated in Table 1. SO_2 and PM emissions, calculated using AVAQMD default emissions factors for LPG-fueled engines, are included in Table 2.

HAP EMISSIONS

Hazardous Air Pollutant (HAP) emissions, also calculated based on maintenance and testing hours and AVAQMD default emission factors, are included in Table 3.

EMISSIONS FROM ENGINE E006783

The new equipment is a replacement for E006783, which will be removed from service. Emissions from E006783 for maintenance and testing for the past 5 years are included in Table 4.

4

RULE COMPLIANCE EVALUATION

Rule 401 – Visible Emissions

Rule 401 limits visible emissions opacity to less than 20 percent (or Ringelmann No. 1). During start up, visible emissions may exceed 20 percent opacity. However, emissions of this opacity are not expected to last three minutes or longer. In normal operating mode, visible emissions are not expected to exceed 20 percent opacity.

Rule 404 – Particulate Matter – Concentration

Rule 404 specifies standards of emissions for particulate matter concentrations. The use of an engine fueled with LPG achieves compliance with Rule 404.

Rule 405 – Solid Particulate Matter - Weight

Rule 405 limits particulate matter emissions from fuel combustion on a mass per unit combusted basis. The use of an engine fueled with LPGs achieves compliance with Rule 405.

Rule 1110.2 - Emissions from Stationary, Non-road & Portable Internal Combustion Engines

Engine units will be limited to use for emergency power, defined as when utility power is not available. A non-resettable operating hour meter will be installed and maintained on each engine unit to indicate elapsed engine operating time. Compliance with Rule 1110.2 will be achieved.

Regulation XIII – New Source Review

<u>Rule 1303 – BACT</u>

Rule 1303 (A) mandates BACT for:

- Any new Permit Unit which emits, or has the Potential to Emit, 25 pounds per day or more of any Nonattainment Air Pollutant; or

- Any new or Modified Facility which emits, or has the Potential to Emit, 25 tons per year or more of any Nonattainment Air Pollutant

As the Northrop Grumman facility has the potential to emit 25 tons per year or more of NOx, BACT is required. The use of an LPG-fired engine equipped with a 3-way catalyst for emergency operation meets the requirement for BACT. Compliance with Rule 1303 (A) is achieved.

Rule 1303– Offsets

New Source Review requires offsets for non-attainment pollutants and their precursors emitted by the addition of new equipment or modifications resulting in a net increase at existing major sources. The Northrop facility is an existing major source of VOC; however, the facility has a monthly VOC limit of 118,625 pounds in any 30-day period based on a 30-day rolling average that has been fully offset. This equipment will operate within the existing limit and there will, therefore, be no net increase in VOC emissions.

Offsets will be required for NOx at a rate of 1.3:1. A total of 3 pounds of NOx Emission Reduction Credits (ERCs) will be provided from the shutdown of Engine E006783 and E006780 to offset the 1.96-pound increase in NOx emissions.

40 CFR 60 Subpart JJJJ - Standards of Performance for Stationary Spark Ignition Internal Combustion Engines

40 CFR 60 Subpart JJJJ applies to this unit as follows: §60.4230 (a)(4)(iv) Owners and operators of stationary SI ICE that commence construction after June 12, 2006, where the stationary SI ICE are manufactured on or after January 1, 2009, for emergency engines with a maximum engine power greater than 19 KW (25 HP).

§60.4233 (e) Owners and operators of stationary SI ICE with a maximum engine power greater than or equal to 75 KW (100 HP) (except gasoline and rich burn engines that use LPG) must comply with the emission standards in Table 1 to this subpart for their stationary SI ICE.

Table 1 to Subpart JJJ of Part 60 requires the following emission rates for engines with a HP rating of >130:

Pollutant	Emission rate
NOx	2.0 g/HP-hr (160 ppmvd@15% O2)
CO	4.0 g/HP-hr (540 ppmvd@15% O2)
VOC	1.0 g/HP-hr (86 ppmvd@15% O2)

The unit Northrop Grumman is planning to install has the following emission rates:

Pollutant	Emission rate
NOx	0.06 g/HP-hr
CO	0.20 g/HP-hr
VOC	0.06 g/HP-hr

Compliance with the requirements of 40 CFR 60 Subpart JJJJis achieved.

40 CFR 63 Subpart ZZZZ - National Emissions Standards for Hazardous Air Pollutants for Stationary Reciprocating Internal Combustion Engines

Pursuant to § 63.6590 (c) for stationary RICE subject to regulations under 40 CFR Part 60, an affected source that is a new emergency spark-ignition stationary RICE with a site rating of less than or equal to 500 brake HP located at a major source of HAP emissions meets the requirements of this part by meeting the requirements of 40 CFR part 60 subpart JJJJ. No further requirements apply to the engine under this part.

AVAQMD Rule 1401 - New Source Review for Toxic Air Contaminants

Rule 1401 establishes allowable risks for equipment requiring new permits pursuant to Rules 201 or 203. To demonstrate compliance with Rule 1401, risk assessment was prepared and submitted with this application.

5

FEE EVALUATION

Pursuant to Rule 301 (D) (1) any person who applies for the issuance of a new or modified permit and subject to the Provisions of Regulation XXX – Federal Operating Permits (Title V) shall be assessed a fee of $1008. This application filing fee is submitted with the application.

Total application fees included with this application are as follows:

Emergency generator permit application x $1008 = $1008

TABLES

Table 1: Potential to Emit NOx. CO and VOC

	Max	Emission Rate (g/bhp			PTE (lbs/year)		
Op_Hours	bhp	NOx	CO	VOC	NOx	CO	VOC
50	398	0.06	0.20	0.06	2.63	8.77	2.63

Emission rates from Power Solution International for PSI EPA Engine Family PPSIB18.3NGP for LPG fuel

Table 2: Potential to Emit PM and SO2

Max Fuel Use gal/hr	Max Operation hr/yr	Max Fuel Use 1000 gals	Pollutant	Emission Factor lb/1000 gals	Emissions (pounds)	
					Max Hourly	Max Annual
31.31	50	1.57	PM	5.00	0.16	7.83
			SO2	0.35	0.01	0.55

Max fuel use:
At 100% of power rating for LPG =1,145.9 ft^3/hr
Heating value of LP = 2500 BTU/ft^{-3}
Heating value of propane = 91,500 BTU/gal

Table 3: Potential to Emit TACs

Max Fuel Use gal/hr	Max Operation hr/yr	Max Fuel Use 1000 gals	Pollutant	CAS	Emission Factor lb/1000 gals	Emissions (pounds)	
						Max Hourly	Max Annual
31.31	50	1.57	1,1 - Dichloroethane	75343	1.03E-03	3.24E-05	1.62E-03
			1,1,2 - Trichloroetrhane	79005	1.40E-03	4.38E-05	2.19E-03
			1,1,2,2 - Tetrachloroethane	79345	2.31E-03	7.25E-05	3.62E-03
			1,2 - Dichloropropane	78875	1.19E-03	3.72E-05	1.86E-03
			1,3 - Dichloropropene	542756	1.16E-03	3.64E-05	1.82E-03
			1,3-Butadiene	106990	6.07E-02	1.90E-03	9.50E-02
			Acenaphthene	83329	1.78E-04	5.56E-06	2.78E-04
			Acenaphthylene	208968	1.33E-03	4.15E-05	2.08E-03
			Acetaldehyde	75070	2.55E-01	7.99E-03	4.00E-01
			Acrolein	107028	2.41E-01	7.53E-03	3.77E-01
			Benzene	71432	1.75E-01	5.47E-03	2.74E-01
			Benzo(b)fluoranthenen	205992	2.17E-05	6.79E-07	3.39E-05
			Benzo(g,h,l)perylene	191242	1.78E-05	5.59E-07	2.79E-05
			Benzo(k)fluoranthene	207089	9.42E-06	2.95E-07	1.48E-05
			Butyr/Isobutyaldehyde	78842	4.45E-03	1.39E-04	6.96E-03
			Carbon tetrachloride	56235	1.62E-03	5.07E-05	2.54E-03
			Chlorobenzene	108907	1.18E-03	3.70E-05	1.85E-03
			Chloroform	67663	1.25E-03	3.92E-05	1.96E-03
			Chrysene	218019	2.84E-05	8.88E-07	4.44E-05
			Ethyl benzene	100414	2.27E-04	7.10E-06	3.55E-04
			Ethylene dibromide	106934	1.95E-03	6.10E-05	3.05E-03
			Ethylene Dichloride	107062	1.03E-03	3.24E-05	1.62E-03
			Fluoranthene	206440	9.10E-05	2.85E-06	1.43E-04
			Fluorene	86737	6.32E-04	1.98E-05	9.90E-04
			Formaldehyde	50000	1.88E+00	5.87E-02	2.94E+00
			Methanol	67561	2.80E-01	8.77E-03	4.38E-01
			Methylene chloride	74953	3.77E-03	1.18E-04	5.90E-03
			Naphthalene	91203	8.88E-03	2.78E-04	1.39E-02
			PAH *	1150	1.29E-02	4.04E-04	2.02E-02
			Phenanthrene	85018	6.47E-04	2.03E-05	1.01E-03
			Propylene	115071	1.46E+00	4.58E-02	2.29E+00
			Pyrene	129000	1.64E-04	5.13E-06	2.56E-04
			Styrene	100425	1.09E-03	3.41E-05	1.70E-03
			Toluene	108883	5.11E-02	1.60E-03	7.99E-02
			Vinyl chloride	75014	6.57E-04	2.06E-05	1.03E-03
			Xylenes	1330207	1.78E-02	5.59E-04	2.79E-02

Table 4: VOC and NOx Emission reduction from the shutdown of Engine E006783

Model Name	Year	Proc Rate mgal	Maint/Total Hours Ratio	Maint PR mgal	NOx_EF lb/mgal	VOC_EF lb/mgal	NOx lb	VOC lb	Maint NOx lb	Maint VOC lb
EG09-Stationary LPG Emer Gen; E006783	2018	0.01	0.5482	0.0055	139	83	1.39	0.83	0.76	0.455
	2019	0.016	0.2490	0.0040	139	83	2.22	1.33	0.55	0.331
	2020	0.006	0.3418	0.0021	139	83	0.83	0.50	0.29	0.170
	2021	0.004	1.0000	0.0040	139	83	0.56	0.33	0.56	0.332
	2022	0.002	1.0000	0.0020	139	83	0.28	0.17	0.28	0.166

Appendix A

MANUFACTURERS DATA

ELECTRICAL CONTRACTORS, INC.

360 KW LP GENERATOR

HEADQUARTERS
10623 Fulton Wells Avenue
Santa Fe Springs, CA 90670
P: 562-946-0700

ANTELOPE VALLEY
41769 11th Street West, Ste. B
Palmdale, CA 93551
P: 661-723-0869

SAN DIEGO
310 Via Vera Cruz, Ste. 106
San Marcos, CA 92078
P: 760-227-0577

SANTA CLARITA VALLEY
28358 Constellation Road
Ste. 620
Santa Clarita, CA 91355
P: 661-402-5809

SILICON VALLEY
217 Devcon Drive
San Jose, CA 95112
P: 408-641-2500

Bill of Materials

SYSTEM DESCRIPTION:
• MTU 10V0183 GS350
• Generator voltage: 480V
• Unit Specification: UL2200, Application 60Hz Standby
• IBC Certification:
• Temp Rise: 130°
• Cooling System: 49°C
CIRCUIT BREAKER:
• 400 Amp 600 Volt 3 Pole 100% LI Square-D LGL36400CU31X
STARTING SYSTEM:
• Starting Batteries (4D) & Battery Rack
- Battery Rack mounted and installed
- 4D Starting Batteries filled with acid
- Qty 2
• Battery Charger: NRG-22-10-HCLS, Qty 1, Mounted
• -20 Deg F Coolant Preheater (208V 1PH - 3000W), Qty 1, Mounted
ENCLOSURE:
• Level 1 - Weather Proof 130MPH Wind Rated Steel Enclosure (83.7 dBA @ 23 ft)
VIBRATION ISOLATOR:
• SUA46908 Pad Isolators ¼ inch thick elastomeric pad
ENGINE SYSTEM:
• Product Type: GG10VK183A1N
• Engine Model: PSI HD 18.3L Turbo Engine Charge Air Cooling
• Exhaust Emissions (EPA): US EPA "Nonroad" 40CFR1048 Spark>19kW
• Fuel Type: LP Vapor
• Fuel System: Dual Fuel NG/LP Vapor
EXHAUST SYSTEM:
• Critical Grade Silencer 5”, Qty 2
FUEL SYSTEM:
• No Tank
AIR INTAKE SYSTEM:
• Air Filter (Standard)
GENERATOR SPECIFICATION:
• Generator Model Number: 433/6216
• PMG with DVR 2400
CONTROL PANEL:
• MGC-2020 Series Control Panel Mounted LH Side
- Contact Expansion Module (CEM)
WARRANTY:
• Standard Two (2) Year / 3,000 Hour Basic Standby (3D) Limited Warranty
PAINT COLOR:
• RAL 7001 Grey
DOCUMENTATION:
• 1 Flash Drive, English
FUNCTIONAL TEST:
• Standard Commercial Test

SHIPMENT:

• Ship unit with fluids installed

OTHERS:

- One Year FREE- WEB ENABLED REMOTE MONITORING SYSTEM

Gas Generator Set

MTU 10V0183 GS350

350 kWe/60 Hz/Standby/208 - 600V
Reference MTU 10V0183 GS350 (300 kWe) for Prime Rating Technical Data

System ratings

Voltage (L-L)	240V †	208V †	240V †	480V †	600V
Phase	1	3	3	3	3
PF	1	0.8	0.8	0.8	0.8
Hz	60	60	60	60	60
Natural Gas (NG)					
Amps	1,438	1,214	1,052	526	421
kW/kVA	345/345	350/437	350/437	350/437	350/437
Liquid Propane (LP)					
Amps	1,000	850	737	368	295
kW/kVA	240/240	245/306	245/306	245/306	245/306
NG and LP					
skVA@30% voltage dip	700	930	930	1,238	1,100
Generator model *	573RSL4035	433CSL6216	433CSL6216	433CSL6216	433PSL6248
Temp rise	130 °C/40 °C	130 °C/40 °C	130 °C/40 °C	130 °C/40 °C	130 °C/40 °C
Connection	12 LEAD DOUBLE DELTA	12 LEAD LOW WYE	12 LEAD HI DELTA	12 LEAD HI WYE	4 LEAD WYE

* Consult the factory for alternate configuration.

† UL 2200 offered

Certifications and standards

- Generator set is designed and manufactured in facilities certified to standards ISO 9001:2008 and ISO 14001:2004
- UL 2200 - optional (refer to *System ratings* for availability)
- CSA - optional
  - CSA C22.2 No. 100
  - CSA C22.2 No. 14
- Performance Assurance Certification (PAC)
  - Generator set tested to ISO 8528-5 for transient response
  - Verified product design, quality and performance integrity
  - All engine systems are prototype and factory tested
- Power rating
  - Accepts rated load in one step per NFPA 110

A Rolls-Royce solution

Standard features *

- MTU is a single source supplier
- Global product support
- 2 year standard warranty
- 18.3L turbo engine charge air cooling
  - 18.3 liter displacement
  - 4-cycle
- 3-way catalyst
- Optional fuel system: NG and LP vapor dual fuel
- Engine-generator resilient mounted
- Complete range of accessories
- Cooling system
  - Integral set-mounted
  - Engine-driven fan
- Generator
  - Brushless, rotating field generator
  - 2/3 pitch windings
  - 300% short circuit capability with Permanent Magnet Generator (PMG)
    - ◊ PMG Standard for 570 frame and larger
    - ◊ PMG Optional for 430 frame and smaller
- Digital control panel(s)
  - UL recognized, CSA certified, NFPA 110
  - Complete system metering
  - LCD display

Standard equipment *

Engine

- Air cleaner
- Oil pump
- Oil drain extension and S/O valve
- Full flow oil filter
- Jacket water pump
- Thermostats
- Blower fan and fan drive
- Radiator - unit mounted
- Electric starting motor - 24V
- Governor – electronic isochronous
- Base - formed steel
- SAE flywheel and bell housing
- Charging alternator - 24V
- Battery box and cables
- Flexible fuel connectors
- Flexible exhaust connection
- EPA certified engine

Generator

- NEMA MG1, IEEE, and ANSI standards compliance for temperature rise and motor starting
- Sustained short circuit current of up to 300% of the rated current for up to 10 seconds (with PMG only)
- Self-ventilated and drip-proof
- Superior voltage waveform
- Solid state, volts-per-hertz regulator (Digital when PMG is standard)
- ±1% voltage regulation no load to full load
- Brushless alternator with brushless pilot exciter
- 4 pole, rotating field
- 130 °C maximum standby temperature rise
- 1-bearing, sealed
- Flexible coupling
- Full amortisseur windings
- 125% rotor balancing
- 3-phase voltage sensing
- 100% of rated load - one step
- 5% maximum total harmonic distortion

Digital control panel(s)

- Digital metering
- Engine parameters
- Generator protection functions
- Engine protection
- SAE J1939 engine ECU communications
- Windows®-based software
- Multilingual capability
- Remote communications to RDP-110 remote annunciator
- Programmable input and output contacts
- UL recognized, CSA certified, CE approved
- Event recording
- IP 54 front panel rating with integrated gasket
- NFPA 110 compatible

* Represents standard product only. Consult the factory/MTU Distributor for additional configurations.

Application data

Engine

Manufacturer	PSI HD
Model	18.3L CAC
Type	4-cycle
Arrangement	10-V
Displacement: L (in³)	18.3 (1,115)
Bore: cm (in)	12.8 (5.04)
Stroke: cm (in)	14.2 (5.59)
Compression ratio	10.5:1
Rated rpm	1,800
Engine governor	Bosch
Maximum power (NG): kWm (bhp)	400 (536)
Maximum power (LP): kWm (bhp)	297 (398)
Speed regulation	± 0.5%
Air cleaner	dry

Liquid capacity (Lubrication)

Total oil system: L (gal)	42.1 (11.1)
Engine jacket water capacity: L (gal)	50 (11)
System coolant capacity: L (gal)	289 (63.5)

Electrical

Electric volts DC	24
Cold cranking amps under -17.8 °C (0 °F)	1,050

Fuel inlet

Fuel supply connection size	3" NPT
Fuel supply pressure: mm H_2O (in. H_2O)	178–279 (7–11)

CONTRACTOR RESPONSIBLE FOR LPG (NATGAS) FUEL LEVEL GAUGE FROM 0 TO 25 INCHES OF WATER COLUMN PRESSURE. IDEAL LPG (NATGAS) PRESSURE IS 10 TO 11 INCHES. THIS MUST BE INSTALLED AT THE BASE FRAME NEAR THE FUEL INLET.

Fuel consumption (NG-1000 BTU/ft³ / LP-2500 BTU/ft³)

	NG	LPG
At 100% of power rating: m³/hr (ft³/hr)	99.1 (3,498.8)	32.5 (1,145.9)
At 75% of power rating: m³/hr (ft³/hr)	77.2 (2,726.7)	27.7 (977.1)
At 50% of power rating: m³/hr (ft³/hr)	54.2 (1,913.7)	18.7 (658.5)

Cooling - radiator system

	NG and LPG
Ambient capacity of radiator: °C (°F)	50 (122)*
Maximum restriction of cooling air: intake and discharge side of radiator: kPa (in. H_2O)	0.12 (0.5)
Water pump capacity: L/min (gpm)	660 (174)
Heat rejection to coolant: kW (BTUM)	365 (20,784)
Heat radiated to ambient: kW (BTUM)	88.5 (5,030)
Fan power: kW (hp)	20.9 (28)

* Installation of enclosures reduces the ambient capacity of the cooling system by 1 °C (1.8 °F). Gravity exhaust louvers reduce ambient capacity of the cooling system by an additional 3 °C (5.5 °F).

Air requirements

	NG and LPG
Aspirating: *m³/min (SCFM)	19.4 (664)
Air flow required for radiator cooled unit: **m³/min (SCFM)	1,019 (36,000)
Remote cooled applications; air flow required for dissipation of radiated generator set heat for a maximum of 25 °F rise: *m³/min (SCFM)	321 (11,350)

* Air density = 1.184 kg/m³ (0.0739 lbm/ft³)
** At 0.25 kPa (1 in. H_2O) static pressure and 52 °C (125 °F) at radiator

Exhaust system

	NG and LPG
Gas temp. (stack): °C (°F)	607 (1,125)
Gas volume at stack temp: m³/min (CFM)	58.6 (2,070)
Maximum allowable back pressure at outlet of engine, before piping: kPa (in. H_2O)	2.5 (10.25)

Weights and dimensions

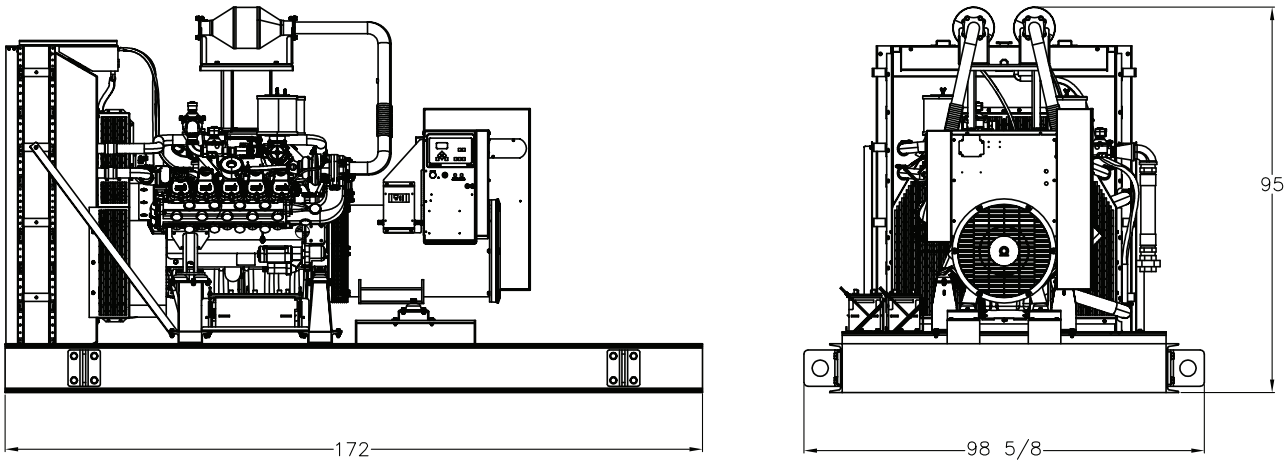

Drawing above for illustration purposes only, based on standard open power 480 volt generator set. Lengths may vary with other voltages. Do not use for installation design. See website for unit specific template drawings.

System	Dimensions (L x W x H)	Weight (dry)
Open power unit (OPU)	4,369 x 2,506 x 2,413 mm (172 x 98.6 x 95 in)	4,741 kg (10,452 lb)

Weights and dimensions are based on open power units and are estimates only. Consult the factory for accurate weights and dimensions for your specific generator set.

Sound data

Unit type	Standby full load (NG)	Standby full load (LP)
Level 0: Open power unit: dB(A)	85.1	84.8

Sound data is provided at 7 m (23 ft). Generator set tested in accordance with ISO 8528-10 and with infinite exhaust.

Emissions data

Fuel type	THC + NO_x	CO
Natural gas	0.59	0.21
Liquid propane	0.07	0.15

- All units are in g/hp-hr and are EPA weighted cycle values. Emission levels of the engine may vary with ambient temperature, barometric pressure, humidity, fuel type and quality, installation parameters, measuring instrumentation, etc. The data was obtained in compliance with US EPA regulations.

Rating definitions and conditions

- Ambient capability factor at 984 ft (300 m). Consult your local MTU Distributor for other altitudes.
- Standby ratings apply to installations served by a reliable utility source. The standby rating is applicable to varying loads for the duration of a power outage. No overload capability for this rating. Ratings are in accordance with ISO 3046-1, BS 5514, and AS 2789. Average load factor: ≤ 85%.
- Consult your local MTU Distributor for derating information.

Subject to change. | 23480 | 2020-02

Collicutt Energy Services, Inc.
12349 Hawkins St.
Santa Fe Springs, CA 90670

Tony Miccolis
Cell: (310) 245-0292
Tony.Miccolis@Collicutt.com

	UNITED STATES ENVIRONMENTAL PROTECTION AGENCY **2023 MODEL YEAR** **CERTIFICATE OF CONFORMITY** **WITH THE CLEAN AIR ACT**	**OFFICE OF TRANSPORTATION** **AND AIR QUALITY** **ANN ARBOR, MICHIGAN 48105**

Certificate Issued To: Power Solutions International, Inc. (U.S. Manufacturer or Importer) **Certificate Number: PPSIB18.3NGP-021**	**Effective Date:** **06/13/2022** **Expiration Date:** **12/31/2023**	**Byron J. Bunker, Division Director** **Compliance Division**	**Issue Date:** **06/13/2022** **Revision Date:** **N/A**

Manufacturer: Power Solutions International, Inc.
Engine Family: PPSIB18.3NGP
Mobile/Stationary Certification Type: Mobile and Stationary
Fuel : Natural Gas (CNG/LNG)
LPG/Propane
Emission Standards :
Mobile Part 1048
HC + NOx (g/kW-hr) : 2.7
NMHC + NOx (g/kW-hr) : 2.7
CO (g/kW-hr) : 4.4
Stationary Part 1048
HC + NOx (g/kW-hr) : 2.7
CO (g/kW-hr) : 4.4
NMHC + NOx (g/kW-hr) : 2.7
Part 60 Subpart JJJJ Table 1
VOC (g/Hp-hr) : 0.7
CO (g/Hp-hr) : 2.0
NOx (g/Hp-hr) : 1.0
Emergency Use Only : N

Pursuant to Section 213 of the Clean Air Act (42 U.S.C. section 7547) and 40 CFR Part 1048, 40 CFR Part 60, 1065, 1068, and 60 (stationary only and combined stationary and mobile) and subject to the terms and conditions prescribed in those provisions, this certificate of conformity is hereby issued with respect to the test engines which have been found to conform to applicable requirements and which represent the following nonroad engines, by engine family, more fully described in the documentation required by 40 CFR Part 1048, 40 CFR Part 60 and produced in the stated model year.

This certificate of conformity covers only those new nonroad spark-ignition engines which conform in all material respects to the design specifications that applied to those engines described in the documentation required by 40 CFR Part 1048, 40 CFR Part 60 and which are produced during the model year stated on this certificate of the said manufacturer, as defined in 40 CFR Part 1048, 40 CFR Part 60. This certificate of conformity does not cover nonroad engines imported prior to the effective date of the certificate.

It is a term of this certificate that the manufacturer shall consent to all inspections described in 40 CFR 1068.20 and authorized in a warrant or court order. Failure to comply with the requirements of such a warrant or court order may lead to revocation or suspension of this certificate for reasons specified in 40 CFR Part 1048, 40 CFR Part 60. It is also a term of this certificate that this certificate may be revoked or suspended or rendered void *ab initio* for other reasons specified in 40 CFR Part 1048, 40 CFR Part 60.

This certificate does not cover large nonroad engines sold, offered for sale, or introduced, or delivered for introduction, into commerce in the U.S. prior to the effective date of the certificate.

Power Solutions International, Inc.
201 Mittel Drive
Wood Dale, IL 60191
www.psiengines.com

0 Hour Non-Deteriorated Emissions Data for Permitting Customers

PSI EPA Engine Family XPSIB18.3NGP "X" denotes generic model year

PSI Engine Model Description PSI-NGE 18.3L Turbo Emrgency or Non-Emergency Stationary

	18.3L LPG	18.3L NG
Displacement	18.3L	18.3L
Test RPM	1800	1800
	g/KW-hr	**g/HP-hr**
BSCO	0.20	0.21
BSCO2	777.32	441.00
BSCH4	0.00	0.56
BSTHC	0.04	NA
BSNMHC	NA	0.00
BSNOx	0.06	0.03
BSTHC+NOx	0.1	NA
BSNMHC+NOx	NA	NA
BSFC (kg/kw-hr)	0.259	0.217

Weighted compositie emissions from ISO 8178 D2 (LPG) & D1 (NG) test cycles
BSFC is the weighted composite fuel consumption over the emission test cycle
LPG Emission Data Units in g/KW-hr
NG Emission Data Units in g/HP-hr

SK36241A

ELECTRICAL CONTRACTORS, INC.

260A ATS

HEADQUARTERS
10623 Fulton Wells Avenue
Santa Fe Springs, CA 90670
P: 562-946-0700

ANTELOPE VALLEY
41769 11th Street West, Ste. B
Palmdale, CA 93551
P: 661-723-0869

SAN DIEGO
310 Via Vera Cruz, Ste. 106
San Marcos, CA 92078
P: 760-227-0577

SANTA CLARITA VALLEY
28358 Constellation Road
Ste. 620
Santa Clarita, CA 91355
P: 661-402-5809

SILICON VALLEY
217 Devcon Drive
San Jose, CA 95112
P: 408-641-2500

OUTLINE FOR ASCO® 300 SERIES 150-600 AMPERE "J" FRAME (3ATS,3NTS,3ADTS,3NDTS) FRONT CONNECTED TRANSFER SWITCHES TYPE 3R/4/4X/12 SECURE ENCLOSURE

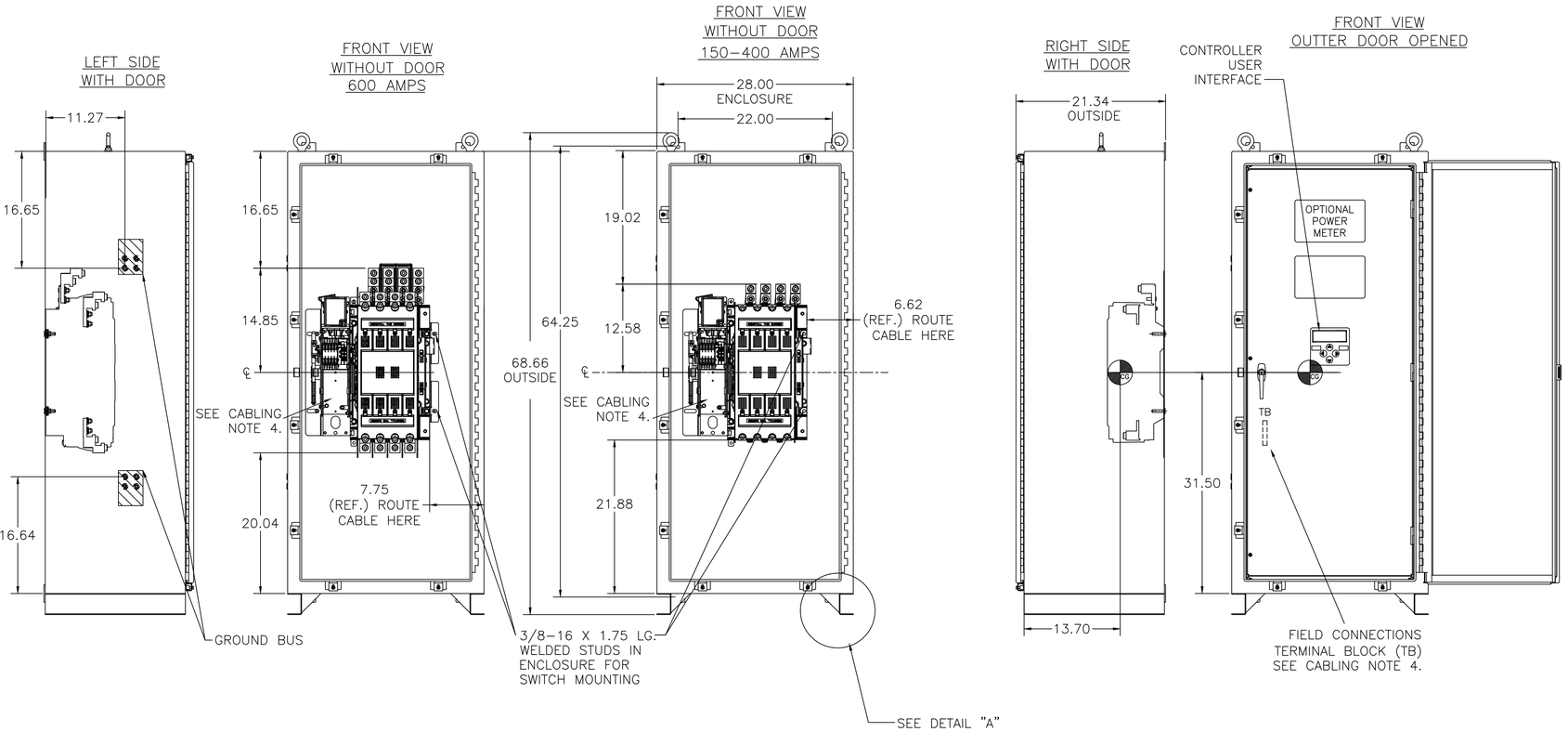

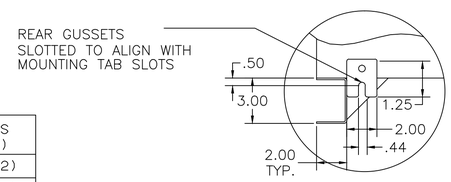

VIEW FROM THE BACK
SEE DETAIL "A"

ATS SWITCH RATING (AMPS)	POLES	WEIGHTS LB (KG)
260-400	2	490 (222)
260-400	3	496 (225)
260-400	4	502 (228)
600	2	495 (225)
600	3	502 (228)
600	4	509 (231)

DTS SWITCH RATING (AMPS)	POLES	WEIGHTS LB (KG)
150-400	2	506 (230)
150-400	3	512 (232)
150-400	4	518 (235)
600	2	511 (232)
600	3	518 (235)
600	4	525 (238)

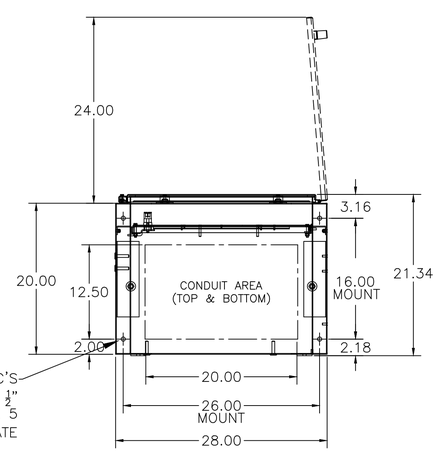

BOTTOM VIEW

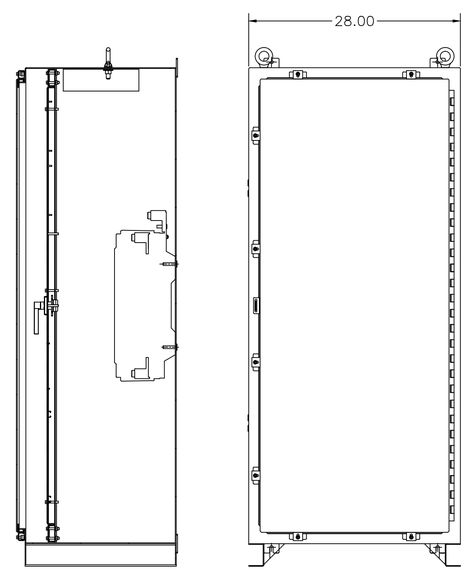

FRONT VIEW
WITH OUTTER DOOR

GENERAL NOTES

1. TYPE 3R/4/4X/12 ENCLOSURE. FREE STANDING. FLOOR OR WALL MOUNTABLE. 14 GAUGE CONSTRUCTION.
2. DOOR HINGED ON RIGHT SIDE. LOCKABLE HASP ON LEFT SIDE, DOOR CLAMPS LEFT, TOP, AND BOTTOM.
3. FINISH: TYPE 3R/4/12: ANSI 61 GRAY POLYESTER SEMI GLOSS ELECTROSTATIC POWDER.
   TYPE 4X (P): EXTERIOR CONSTRUCTED OF CODE GAUGE TYPE 304 STAINLESS STEEL.
   TYPE 4X (V): EXTERIOR CONSTRUCTED OF CODE GAUGE TYPE 316 STAINLESS STEEL.
   OTHER ANSI COLORS AVAILABLE CONSULT FACTORY UL RECOGNIZED.
4. RECOMMENDED CLEARANCES:
   FRONT: 24 INCHES
5. A 20% RATED GROUND BUS IS PROVIDED.
6. UNIT IS DESIGNED FOR COMBINATION TOP AND BOTTOM CABLE ENTRY. THE STANDARD SWITCH CONFIGURATION IS FOR TOP LUGS EMERGENCY AND LOAD AND BOTTOM LUGS NORMAL.
7. A FULL RATED NEUTRAL CONNECTION FOR EACH SOURCE AND THE LOAD IS OPTIONAL. WHEN PROVIDED IT IS IN ONE OF THE FOLLOWING FORMATS AS SPECIFIED BY THE CATALOG NO. NEUTRAL TYPE;
   A. SOLID (COPPER BUS) NEUTRAL
   B. SWITCHED NEUTRAL POLE
8. CG CENTER OF GRAVITY.
9. WHEN INSTALLING GROUND LUGS TO TYPE 4 ENCLOSURE, REMOVE HARDWARE FROM STUDS AND REMOVE MASKING PLATES TO EXPOSE UNPAINTED SURFACE.

CABLING NOTES

1. ALL SIZES SUPPLIED STANDARD WITH MECHANICAL (SCREW TYPE) LUGS. (SEE AMP SIZE BELOW)
   A. LUG MATERIAL: ALUMINUM ALLOY 6061–T6 WITH ELECTRO TIN PLATED FINISH.
   B. SCREW MATERIAL: ALUMINUM ALLOY 6262–T9 WITH ELECTRO TIN PLATED FINISH.
   C. UL LISTED, CSA CERTIFIED.
   D. LUG SCREW TIGHTENING TORQUE PER UL 486B: 19 FT–LBS.
   E. SUITABLE WIRE BENDING SPACE IS PROVIDED. (SEE AMP SIZE BELOW)
2. CONSULT FACTORY FOR OTHER TERMINATION REQUIREMENTS.
3. GROUND LUGS ARE PROVIDED STANDARD AS FOLLOWS. (SEE AMP SIZE BELOW)
4. CUSTOMER TERMINAL BLOCKS:
   THE TB WILL BE MOUNTED ON THE TRANSFER SWITCH FRAME AS INDICATED

NOTES 150–400 AMP SWITCHES

1. SUPPLIED WITH STANDARD MECHANICAL (SCREW TYPE) LUGS ON THE NORMAL, EMERGENCY & LOAD BUS STABS. ONE (1) LUG PER PHASE AND NEUTRAL EACH SUITABLE FOR CONNECTION OF TWO (2) 1/0 –250MCM CU/AL CABLES OR ONE (1) #4 –600MCM CU/AL CABLE.
   A. SUITABLE WIRE BENDING SPACE IS PROVIDED FOR UP TO ONE (1) 600MCM CABLE PER TERMINAL PER NEC.
2. GROUND LUGS ARE PROVIDED STANDARD AS FOLLOWS;
   SIX (6) 1/0 –250MCM CU/AL CABLES OR THREE (3) #4 –600MCM CU/AL CABLE CONNECTIONS.

NOTES 600 AMP SWITCHES

1. SUPPLIED WITH STANDARD MECHANICAL (SCREW TYPE) LUGS ON THE NORMAL, EMERGENCY & LOAD BUS STABS. ONE (1) LUG PER PHASE AND NEUTRAL EACH SUITABLE FOR CONNECTION OF TWO (2) #2 –600MCM CU/AL CABLES.
   A. SUITABLE WIRE BENDING SPACE IS PROVIDED FOR UP TO TWO (2) 600MCM CABLE PER TERMINAL PER NEC.
2. GROUND LUGS ARE PROVIDED STANDARD AS FOLLOWS;
   SIX (6) #2 –600MCM CU/AL CABLE CONNECTIONS.

REV. TO SHEET	ECN NO.	BY	APP.	DATE
—	271129	RCW	HSL	02/15/18
	NEW ISSUE			

PROJECT NAME:

COMPOSITE — OUTLINE

300 SERIES TS "J" SEISMIC
150–600 AMP 3R/4/4X/12 SECURED

THIRD ANGLE PROJECTION

	BY	DATE
DRAWN BY	RCW	02/15/18
CHECKED	HSL	02/15/18
PROJECT APPROVAL	BK	02/15/18
FINAL APPROVAL		

MANUFACTURING TOLERANCES TO BE IN ACCORDANCE WITH ASCO PROCEDURE MP–I–003. FOR PLASTIC PARTS SEE MP–I–055

ASSEM. REF. NO.

PROPERTY OF ASCO POWER TECHNOLOGIES. USE PERMITTED FOR OUR WORK ONLY. ALL RIGHTS OF DESIGN OR INVENTION ARE RESERVED.

ASCO® ASCO POWER TECHNOLOGIES, L.P.
FLORHAM PARK, NEW JERSEY 07932 U.S.A.

COMPUTER GENERATED DRAWING

SCALE NONE — SIZE DS

DWG. NO. 1001393–024

DRAWING REV. — ECN NO. 271129 — SHEET 1 OF 1

ELECTRICAL CONTRACTORS, INC.

250A PANELBOARD

HEADQUARTERS
10623 Fulton Wells Avenue
Santa Fe Springs, CA 90670
P: 562-946-0700

ANTELOPE VALLEY
41769 11th Street West, Ste. B
Palmdale, CA 93551
P: 661-723-0869

SAN DIEGO
310 Via Vera Cruz, Ste. 106
San Marcos, CA 92078
P: 760-227-0577

SANTA CLARITA VALLEY
28358 Constellation Road
Ste. 620
Santa Clarita, CA 91355
P: 661-402-5809

SILICON VALLEY
217 Devcon Drive
San Jose, CA 95112
P: 408-641-2500

Seq #	Qty	Product Description
1	1	**Designation :** PAA-1 **Product Details:** 1 - NF MB PNLB (INT BOX TRIM)-NF Panelboard Consisting of 480Y/277V 3Ph 4W 60Hz SCCR: 65kA Fully Rated Single Main: 250AS/225AT/3P PJ Circuit Breaker 80% Rated Main Trip Function: LSI Main Trip Unit: Standard Trip Unit Incoming Conductors: 1 - (3) 3/0 - 500 kcmil Bus: 800A Rated Copper: Silver/Tin Plated CU Ground Bar 30 Circuit Interior Type 1,Box: 68H x 26W x 8.75D Incoming: Bottom Trim: Surface - Hinged Box Cat No: MH68D98L3R3 Front Cat No: NC68VS3PNFHRL3R3 Ref. Drawing: PBA756HR Feeders: 1 - 70A/3P EJB 1 - 20A/3P EJB 21 - 20A/1P EJB Prepared Space 1 - 60A/3P EJB Optional Features: Ship Completely Assembled,Copper Solid Neutral,Seismic Qualification - IBC/ASCE7/CBC/NBCC,Copper Ground Bar Standard Nameplate: Engraved as Follows Line 1: PAA-1 Size: 3.50" Wide x 1.00" High (Std) Color: White Surface / Black Letters Plastic/Adhesive - Screw-on

REV	DESCRIPTION	BY	DATE	–	----	--	--/--/--
–	----	--	--/--/--	–	----	--	--/--/--

CKT NO	ACCESSORIES	TYPE	RATING AMP/P	RATING AMP/P	TYPE	ACCESSORIES	CKT NO
1		EJB	70/3	60/3	EJB		2
3							4
5							6
7		EJB	20/3	20/1	EJB	PREPARED SPACE	8
9				20/1	EJB	PREPARED SPACE	10
11				20/1	EJB	PREPARED SPACE	12
13	PREPARED SPACE	EJB	20/1	20/1	EJB	PREPARED SPACE	14
15	PREPARED SPACE	EJB	20/1	20/1	EJB	PREPARED SPACE	16
17	PREPARED SPACE	EJB	20/1	20/1	EJB	PREPARED SPACE	18
19	PREPARED SPACE	EJB	20/1	20/1	EJB	PREPARED SPACE	20
21	PREPARED SPACE	EJB	20/1	20/1	EJB	PREPARED SPACE	22
23	PREPARED SPACE	EJB	20/1	20/1	EJB	PREPARED SPACE	24
25	PREPARED SPACE	EJB	20/1	20/1	EJB	PREPARED SPACE	26
27	PREPARED SPACE	EJB	20/1	20/1	EJB	PREPARED SPACE	28
29	PREPARED SPACE	EJB	20/1	20/1	EJB	PREPARED SPACE	30

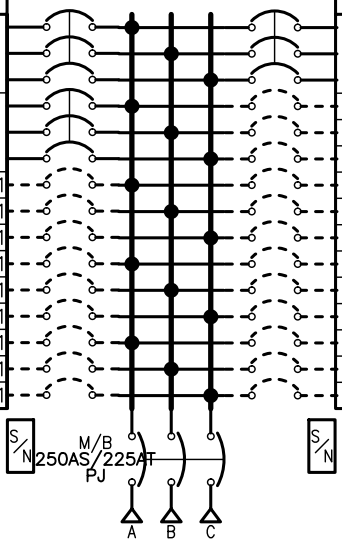

PHYSICAL DATA

ENCLOSURE Type 1
Surface – Hinged
FRONT CAT#: NC68VS3PNFHRL3R3
BOX CAT#: MH68D98L3R3

DIMENSIONS:
68''(1727mm)Hx26"(660mm)Wx8.75''(222mm)D

WIRE BENDING SPACE:
TOP – 12.25"(312)mm
BOTTOM – 14.23"(362)mm
SIDE – 4.1"(105)mm
PBA: 756HR

BUSSING: 800A RATED COPPER BUS
Silver/Tin Plated

OPTIONAL FEATURES:
SEISMICALLY QUALIFIED : IBC/ASCE7/CBC/NBCC
SHIP COMPLETELY ASSEMBLED
Copper GROUND BAR
COPPER SOLID NEUTRAL
Maximum Panel Weight 217.
Depth Center of Gravity 8.75
Elevation Center of Gravity 34.0
Vertical Center of Gravity 13.0
MFG NOTE : GUTTER MOUNTED CONDO RISER NEUTRALS

---STANDARD EQUIPMENT NAMEPLATE---
Engraved as Follows

(Continued on next page.)

ELECTRICAL DATA

SYSTEM: 480Y/277V 3Ph 4W 60Hz
System Ampacity: 250A
65kA SYMS. SCCR
Fully Rated

MAIN: MAIN BREAKER PJ 250AS/225AT
ACC: STD LSI
Bottom FEED
65kA AIR
INCOMING CONDUCTORS(S) PER NEC, CEC, NOM:
Wire Bending Space:
Phase Lugs:1 – (3) 3/0 – 500 kcmil

----------BRANCH SUMMATION----------

1 – 70A/3P EJB	1 – 20A/3P EJB
21 – 20A/1P–PS EJB	1 – 60A/3P EJB

JOB NAME:	NGC LIFT STATIONS REHAB SITE 4 PAN	EQUIPMENT DESIGNATION:	PAA–1
JOB LOCATION:		EQUIPMENT TYPE:	NF (Circuit Breaker Type) PANEL 1 OF 1
DRAWN BY:	(Q2C)	DRAWING TYPE:	ONE LINE DIAGRAM
ENGR:			SQUARE D by Schneider Electric
DATE:	June 06 2023		
DRAWING STATUS:	QUOTE	DWG# OQ–4168214–120379702–01	PG 1 OF 2 REV –

REV	DESCRIPTION	BY	DATE	-	----	--	--/--/--
-	----	--	--/--/--	-	----	--	--/--/--

PHYSICAL DATA CONTINUED

LINE 1: PAA-1
COLOR: White Surface / Black Letters
SIZE: 3.50" Wide x 1.00" High (Std)
TYPE: Plastic/Adhesive - Screw-on

JOB NAME:	NGC LIFT STATIONS REHAB SITE 4 PAN	EQUIPMENT DESIGNATION:	PAA-1
JOB LOCATION:		EQUIPMENT TYPE:	NF (Circuit Breaker Type) PANEL 1 OF 1
DRAWN BY:	(Q2C)	DRAWING TYPE:	ONE LINE DIAGRAM
ENGR:		SQUARE D by Schneider Electric	
DATE:	June 06 2023		
DRAWING STATUS:	QUOTE	DWG# OQ-4168214-120379702-01	PG 2 OF 2 REV -

REV	DESCRIPTION	BY	DATE	-	----	--	--/--/--
-	----	--	--/--/--	-	----	--	--/--/--

REQUIREMENTS FOR SEISMIC RATING

SQUARE D PANELBOARDS HAVE BEEN TESTED TO IBC/ASCE7/CBC/NBCC.

THE PANELBOARD TYPES LISTED BELOW MEET THE IBC/ASCE7/CBC/NBCC.

PANELBOARD TYPE	ENCLOSURE TYPE
NQ	TYPE 1, 3R, 5, 12, 4/4X (SS)
NQ COLUMN WIDTH	TYPE 1
NF (STANDARD OR COLUMN WIDTH)	TYPE 1, 3R, 5, 12, 4/4X (SS)
I-LINE	TYPE 1, 3R, 5, 12, 4/4X (SS)
QMB	TYPE 1, 3R, 5, 12, 4/4X (SS)

GUIDELINES:

1) BOLT-ON CIRCUIT BREAKERS ARE REQUIRED ON NQ AND NF PANELBOARDS.
2) ENCLOSURES MUST BE SECURED TO THE WALL OR STRUCTURE BY UTILIZING ALL MOUNTING HOLES PROVIDED IN THE ENCLOSURE AND SECURED WITH SAE GRADE 5 STEEL BOLTS SIZED PER THE MOUNTING HOLES.

ANCHORING CONDITIONS

TO MAINTAIN SEISMIC QUALIFICATIONS, EQUIPMENT MUST BE INSTALLED PER MANUAL (SEE GENERAL NOTES) IN ADDITION TO ANY SEISMIC ANCHORING DETAILS PROVIDED BY OTHERS. DO NOT INSTALL EQUIPMENT BEFORE APPROVED SEISMIC ANCHORING DETAILS HAVE BEEN OBTAINED AND SITE PREPARATIONS HAVE BEEN. MADE IN ACCORDANCE WITH THE APPROVED SIESMIC ANCHORING DETAILS. ALL POST-INSTALLED ANCHORS SHALL BE APPROVED FOR SEISMIC LOADS.

CENTER OF GRAVITY:

THE CG INFORMATION PROVIDED BELOW SHOULD ONLY BE USED FOR SEISMIC ANCHORING CALCULATIONS.

ELEVATION CENTER OF GRAVITY: 34.0 "ABOVE BOTTOM OF ENCLOSURE
DEPTH CENTER OF GRAVITY: 8.75 "FROM BACK WALL OF ENCLOSURE
VERTICAL CENTER OF GRAVITY: 13.0 "FROM LEFT WALL OF ENCLOSURE

SECTION WEIGHT:

THE WEIGHTS GIVEN BELOW ARE THE MAXIMUM FOR EACH SECTION AND SHOULD BE USED FOR CALCULATING. SEISMIC ANCHORING REQUIREMENTS

MAXIMUM PANEL WEIGHT: 217. LBS / 98.7KGS

JOB NAME:	NGC LIFT STATIONS REHAB SITE 4 PAN	EQUIPMENT DESIGNATION:	PAA-1
JOB LOCATION:		EQUIPMENT TYPE:	NF (Circuit Breaker Type) PANEL 1 OF 1
DRAWN BY:	(Q2C)	DRAWING TYPE:	ONE LINE DIAGRAM
ENGR:		SQUARE D by Schneider Electric	
DATE:	June 06 2023		
DRAWING STATUS:	QUOTE	DWG# OQ-4168214-120379702-S1	PG 1 OF 1 REV -

HEALTH RISK ASSESSMENT
2023 SITE 4 EXPANSION

OCTOBER 2023

Prepared for:
NORTHROP GRUMMAN CORPORATION
Palmdale, California

•••

Prepared by:
Verdant Environmental
South Pasadena, CA

TABLE OF CONTENTS

1

Executive Summary 1
Background 1

2

Introduction 8
Background 8
Project Description 8
Site Description 9
Approach 9

3

Air Toxics Emission Inventory 11
New Coating Operations 11
Natural Gas-Fired Heaters 13
Emergency Generators 13
Existing Operations 13

4

Health Risk Assessment 15
Hazard Identification 16
Air Dispersion Modeling 16
Risk Characterization 18

5

Conclusions 22

TABLES

Table 1 New equipment being added to the Northrop Grumman Palmdale facility
Table 2 Criteria emissions from Phase III coating operations

Table 3	AB2588 listed chemicals present in coatings to be used in Phase III operations
Table 4	The quantity of AB2588 listed chemicals present in coatings to be sued in Phase II operations
Table 5	Emissions of non-volatile chemicals from coating operations equipped with HEPA filtration
Table 6	Emissions of volatile chemicals from the rotary concentrator
Table 7	Emissions from the RTO
Table 8	Emissions of HCl and HF resulting from the combustion of Parachlorobenzotrifluoride and trifluoropropylmethyl
Table 9	Semi-volatile chemicals present in coatings to be used in Phase III operations
Table 10	Quantity of semi-volatile chemicals released during coating operations
Table 11	Quantity of semi-volatile chemicals emitted during coating operations
Table 12	Natural gas consumption in the Rotary Concentrator and Regenerative Thermal Oxidizer
Table 13	Emissions from natural gas combustion in the rotary concentrator and regenerative thermal oxidizer
Table 14	Boilers that will be installed as part of the Phase III expansion
Table 15	Annual emissions from boilers installed as part of the Phase III expansion
Table 16	Hourly emissions from boilers installed as part of the Phase III expansion
Table 17	Emergency IC engines installed as part of the current permit action
Table 18	Emissions from the natural gas fired emergency generator to be installed in support of Phase II operations
Table 19	Emissions from the emergency IC engine replacing an existing engine at the S4 sewer lift station
Table 20	Emissions from the IC engine replacing an existing emergency generator at B333
Table 21	Summary of emission estimates used in assessing risk from Northrop sources
Table 22	Hourly emission rates used in estimating risk from the Phase III expansion
Table 23	Hazards associated with chemicals emitted from Northrop Sites 3 and 4
Table 24	Source data used in estimating impacts from operations at the Northrop sites
Table 25	Structure data used to estimate building downwash
Table 26	Excess cancer risk associated with emissions from the permit action alone and in conjunction with new and existing operations
Table 27	Contribution of chemicals emitted from Site 4 after the permit action to excess cancer risk at the MEIR
Table 28	Contribution of chemicals emitted from equipment in the permit action to excess cancer risk at the MEIR
Table 29	Contribution of chemicals emitted from Site 4 after the permit action to excess cancer risk at the MEIW
Table 30	Contribution of chemicals emitted from permit action operations to excess cancer risk at the MEIW
Table 31	Contribution by chemical to excess cancer risk from all sources at the PMI
Table 32	Contribution of chemicals emitted from Site 4 after the permit action to excess cancer risk at the MEIW
Table 33	Target organs considered in the evaluation of chronic hazard

Table 34 Chronic hazard associated with emissions from the permit action alone and in conjunction with new and existing operations
Table 35 Contribution of chemicals emitted from Site 4 after the permit action to chronic hazard at the MEIR
Table 36 Contribution of chemicals emitted from permit action operations to chronic hazard at the MEIR
Table 37 Target organs considered in the evaluation of acute hazard
Table 38 Acute hazard associated with emissions from the permit action alone and in conjunction existing operations
Table 39 Contribution of chemicals emitted from all operating sources to acute hazard at the MEI
Table 40 Contribution of chemicals emitted from permit action operations to acute hazard at the MEI

FIGURES

Figure 1 Location of new coating operations at Site 4
Figure 2 Air Force Plant 42
Figure 3 Land use in the vicinity of Air Force Plant 42
Figure 4 Wind rose
Figure 5 Location of receptors used in assessing ambient air quality impacts
Figure 6 Location and height of structures used to determine downwash characteristics
Figure 7 Excess cancer risk associated with emissions from the permit action operations in conjunction with all existing sources assuming residential exposure.
Figure 8 Excess cancer risk associated with emissions from the permit action in conjunction with all existing sources assuming worker exposure.
Figure 9 Chronic hazard associated with emissions from the permit action in conjunction with all existing sources assuming residential exposure.
Figure 10 Acute hazard associated with emissions from the permit action in conjunction with all existing sources.

APPENDICES

Appendix A Cancer Burden

DEFINITIONS AND ACRONYMS	
AB 2588	Assembly Bill 2588, the "Air Toxics 'Hot Spots' Information and Assessment Act of 1987".
Acute	Acute exposures are generally exposures to high levels of air toxicants over a short time period, herein evaluated as a maximum one hour exposure.
AVAQMD	Antelope Valley Air Quality Management District
Cancer Burden	See Population Excess Cancer Burden
CAPCOA	California Air Pollution Control Officers' Association
Chronic	Chronic exposures are generally exposures to relatively low levels of air toxicants over an extended time period.
Dispersion Factor	A factor specific to each source which is the ratio of the concentration of an air toxicant to the emission rate of that toxicant, derived from atmospheric dispersion modeling.
Dose Response	A characterization of the relationship between the exposure to a toxic agent and the incidence of an adverse health effect in exposed populations.
Emission Rate	The amount of toxics releases to the atmosphere over a given time period; herein, considered as an annual average or maximum one-hour emission rate.
EPA	U.S. Environmental Protection Agency.
Exposure Adjustment Factor	A factor which may be employed to account for exposure rates to carcinogenic substances less than a continuous 70-year lifetime, generally used in the assessment of cancer risks to occupational receptors.
Exposure Pathway	Routes of exposure or routes by which air toxicants may enter the body, such as inhalation, ingestion, skin absorption, etc.
Health Risk Assessment	A comprehensive analysis of the dispersion of hazardous substances in the environment, the potential for human exposure and a quantitative assessment of both individual and population wide health risks associated with those levels of exposure.
HHI	See Health Hazard Index.
Health Hazard Index	The sum of the ratios of a calculated concentration of an air toxicant to the reference exposure level, used as a tool to estimate the potential for non-cancer health impacts.
Individual Excess Cancer Risk	The expected increased number of cancers (not necessarily fatal cancers), calculated at a particular point and generally based on a 70-year lifetime continuous exposure.

DEFINITIONS AND ACRONYMS	
ISCST	Industrial Source Complex Short Term air dispersion model recommended for use by U.S. EPA and ARB.
MEIR	Maximum impacted offsite location where there is an existing residential receptor designated maximally exposed individual resident.
Multipathway Exposure	Exposure by more than one exposure pathway.
Multipathway Pollutant	A pollutant expected to impact population exposure via more than one exposure pathway.
Occupational Exposure Adjustment Factor	For cases where a source operates less than continuously, and the exposure is in an occupational setting, the calculated cancer risk may be adjusted using a factor of 0.66 which accounts for occupational exposure for 46 years during a 70-year lifetime.
OEHHA	Office of Environmental Health Hazard Assessment, a branch of the California Environmental Protection Agency.
Organ System	Potential target of non-cancer impact, such as the kidney or reproductive system.
PMI	Point of maximum impact.
Population Excess Cancer Burden	The estimated increase in the number of cancers (not necessarily fatal cancers) in an exposed population.
Receptor Points	Locations outside the facility boundary for which detailed risk calculations are made.
REL	See Reference Exposure Level.
Reference Exposure Level	A concentration level or dose below which no adverse non-carcinogenic health effects are anticipated.
Sensitive Receptor	Sites such as schools, daycare centers, and hospitals, which are expected to contain high densities of individuals which may be more sensitive to the effects of toxic air pollutants than the general population.
SCAQMD	South Coast Air Quality Management District
Source	Unit, equipment, or operation which emits toxic air contaminants.
Synergistic effects	Cumulative effects which are greater than the sum of each individual effect.
URF	The estimated probability of a person contracting cancer as a result of constant exposure to a one microgram per cubic meter ambient concentration of a particular toxicant over a 70-year lifetime.
Unit Risk Factor	See URF.

DEFINITIONS AND ACRONYMS	
UTM	A coordinate system based on meters north of the equator and east from a standard reference.
Zone of Impact	The area within which the calculated individual excess cancer risk equals or exceeds one in a million.

1

EXECUTIVE SUMMARY

BACKGROUND

The Northrop Grumman Corporation (Northrop) operates aircraft manufacturing and repair facilities at Air Force Plant 42 Sites 3, 4, 7 and 8 in Palmdale, California. The Antelope Valley Air Quality Management District (AVAQMD) Facility ID is 01816.

Northrop is expanding its operations in Palmdale to include a new paint hangar. Emissions from the paint hangar will be controlled by a rotary concentrator and regenerative thermal oxidizer as well as an acid gas scrubber. The project will also include eight new natural gas fired boilers each rated at 6 mmBtu/hr as well as a natural gas fired emergency generator. The facility is also planning to replace the LPG fired emergency generator at the Site 3 lift station and the diesel fired emergency engine at B333 with new LPG fired units.

The facility is submitting permit applications for the new paint hangar and associated equipment as well as for the new lift station and B/333 generators.

The risk associated with the balance of the equipment in use at the Northrop facility is based on emission estimates presented in the 2022 CEIR report which was submitted to the AVAQMD in February of 2023.

Why is this analysis being done?

Northrop is subject to AVAQMD Rule 1401. Rule 1401 imposes limits on the allowable excess cancer, chronic hazard, and acute hazard risks from a facility. Northrop must demonstrate that emissions from the new operations in conjunction with those from its current operations do not result in:

- an excess cancer risk greater than one in one million, or
- an excess cancer risk greater than ten in one million if the facility has applied Toxics – Best Available Control Technology (T-BACT);
- a chronic hazard index greater than one;
- an acute hazard index greater than one.

How is risk from facility emissions evaluated?

Health risk assessment is a process of quantitatively estimating the risk to human health caused by exposure to a given substance. The term is used to refer to a variety of methodologies with different applications but is generally divided into four components: hazard identification, exposure assessment, dose-response assessment, and risk characterization.

Hazard Identification

Hazard identification refers to the identification of substances such as carcinogens, chronic toxins and acute toxins. After a substance is identified as a health hazard in this first step, the rest of the process is used to assess the magnitude of the hazard. A list of HAP emitted from existing and proposed operations at Site 4 is presented below along with the hazard each presents:

Chemical	New Sources	Current	Cancer Risk	Chronic Hazard	Acute Hazard
Glycol ethers (and their acetates)		x			
Isocyanates	x	x			
PAHs, total, with individ. components also reported	x	x			
Polymeric (Oligo) HDI	x				x
Diesel engine exhaust, particulate matter (Diesel PM)		x	x	x	
Formaldehyde	x	x		x	
Benzo[a]pyrene	x		x		
Dibenz[a,h]anthracene	x	x	x		
Carbon tetrachloride	x	x	x		x
3-Methylcholanthrene	x		x	x	
Benz[a]anthracene	x		x		
7,12-Dimethylbenz[a]anthracene	x		x		
Methanol	x	x			x
Isopropyl alcohol	x	x		x	x
Chloroform	x	x	x	x	x
n-Butyl alcohol	x	x		x	
Benzene	x	x	x		x
Ethylene		x		x	
Methylene bromide	x	x			
Vinyl chloride	x	x	x		x
Acetaldehyde	x	x	x		x
Methylene chloride {Dichloromethane}		x	x	x	x
1,1-Dichloroethane	x	x	x	x	
Chlorodifluoromethane {Freon 22}		x			
Isobutyraldehyde	x				
1,2-Dichloropropane	x	x			
sec-Butyl alcohol	x	x			
Methyl ethyl ketone {2-Butanone}	x	x			x
1,1,2-Trichloroethane	x	x	x		
Acrylic acid		x			x
1,1,2,2-Tetrachloroethane	x	x	x		
4,4'-Isopropylidenediphenol	x	x			

Chemical	New Sources	Current	Cancer Risk	Chronic Hazard	Acute Hazard
Cumene hydroperoxide		x			
Methyl methacrylate		x			
Acenaphthene	x	x			
Phenanthrene	x				
Butyl benzyl phthalate		x			
Fluorene	x				
Naphthalene	x	x	x		
2-Methyl naphthalene	x			x	
1,2,4-Trimethylbenzene	x	x			
1-Chloro-4-(trifluoromethyl)benzene [PCBTF]	x	x	x		
Cumene		x			
Ethyl benzene	x	x	x		
Styrene	x	x		x	x
Methylene diphenyl diisocyanate {MDI}	x	x		x	
Ethylene dibromide {EDB}	x	x	x		
1,3-Butadiene	x	x	x	x	x
Acrolein	x	x		x	x
Ethylene dichloride {EDC}	x	x	x	x	
Ethylene glycol		x		x	
Propylene glycol monomethyl ether		x		x	
Vinyl acetate		x		x	
Methyl isobutyl ketone {Hexone}	x	x		x	
Propylene glycol monomethyl ether acetate	x	x			
Toluene	x	x			
Chlorobenzene	x	x			
Phenol		x		x	x
Hexane	x	x		x	
Cyclohexane		x		x	
Diethanolamine		x			
Diethylene glycol		x		x	
Ethylene glycol monobutyl ether		x			x
Diethylene glycol monoethyl ether		x		x	
Diethylene glycol dimethyl ether		x			
Propylene	x	x			
Anthracene	x				
Triethylamine		x			x
N,N-Dimethylaniline		x		x	
Pyrene	x				
Benzo[g,h,i]perylene	x				
Indeno[1,2,3-cd]pyrene	x		x		
Benzo[j]fluoranthene	x		x		
Benzo[b]fluoranthene	x		x		
Fluoranthene	x	x			
Benzo[k]fluoranthene	x				x
Acenaphthylene	x	x		x	
Chrysene	x		x		
2,2,4-Trimethylpentane		x			
t-Butyl acetate	x	x	x		
1,3-Dichloropropene	x	x			

Chemical	New Sources	Current	Cancer Risk	Chronic Hazard	Acute Hazard
Toluene-2,4-diisocyanate	x	x	x		x
Carbon monoxide		x		x	x
Hexamethylene-1,6-diisocyanate	x	x			x
Xylenes (mixed)	x	x		x	x
Aluminum oxide (fibrous)		x	x	x	
Methyl tert-butyl ether		x	x	x	
Ethylene glycol monopropyl ether		x		x	
Aluminum		x			
Lead	x	x	x		
Manganese	x	x			
Mercury	x	x		x	x
Nickel	x	x	x	x	x
Silver	x	x		x	
Arsenic	x	x	x		x
Barium	x	x		x	
Beryllium	x	x	x		
Cadmium	x	x	x		
Chromium	x	x	x		x
Cobalt	x	x	x	x	
Copper	x	x	x		
Vanadium (fume or dust)	x	x	x		
Zinc	x	x			x
Hydrochloric acid	x	x		x	x
Phosphoric acid		x	x	x	x
Hydrogen fluoride	x		x	x	
Ammonia	x	x			x
Selenium	x	x		x	
Hydrogen sulfide		x		x	x
Strontium chromate	x	x	x	x	
Barium chromate	x	x	x	x	
Silica, crystalline (respirable), in the form of cristobalite		x		x	
Silica, crystalline (respirable), in the form of quartz	x	x		x	
Chromium (III)	x			x	x
Chromium, hexavalent (& compounds)		x	x	x	
Dipropylene glycol	x	x	x	x	
Dichlorobenzenes (mixed isomers)	x				
Toluene diisocyanates		x	x		x
Dipropylene glycol monomethyl ether		x			

Exposure Assessment

Exposure assessment is the identification and quantification of all routes of human exposure to the substance, including inhalation, ingestion, and dermal absorption. This generally involves modeling the release and dispersion of air emissions to establish the number of people exposed, the concentrations to which they are exposed, and the duration of the exposure. This is accomplished using an air dispersion model identified as AERMOD. AERMOD was developed by the U.S. EPA in order to estimate the

concentration of a chemical at various distances from a source under local meteorological conditions.

The concentration data from AERMOD is used along with various algorithms to establish exposure from all applicable exposure pathways. These algorithms are described by the Air Toxics Hot Spots Risk Assessment Guidelines developed by the California Environmental Protection Agency and are incorporated into the Air Dispersion Modeling and Risk Tool (ADMRT) as part of the Hot Spots Analysis and Reporting Program (HARP). All of the calculated exposures used in the assessment of risk from the facility were developed using HARP2 ADMRT (Dated 22118).

Dose-Response Assessment

Dose-response assessment is a process of establishing a quantitative relationship between the concentration to which a person is exposed and the change in the person's state of health due to that exposure. This relationship takes the form of a potency slope factor for carcinogens and, for other toxic compounds, a reference exposure level (REL).

Risk Characterization

Risk characterization is the integration of the exposure and dose-response assessments into a quantitative characterization of the human health risk posed by the exposure. For carcinogens, the risk is often characterized as the number of estimated excess cancer cases in the exposed population or the probability that the maximally exposed individual will incur cancer after a lifetime of exposure. For other toxins, the risk is characterized by comparing the exposure concentration to a level recognized as safe, such as the REL.

The product of potency slope factor and dose provides an estimate of excess cancer risk. The ratio of dose and REL provides an estimate of the hazard index. A hazard index can be calculated for both acute (short term) and chronic (long term) exposure. A hazard index is calculated for each appropriate target organ system and summed over all chemicals. The analysis was completed using the most recent health database (Version 082023)

What operating scenarios are considered?

Air toxics emissions from the new coating operations are based on the estimated number of shipsets that can be produced at each stage in the implementation process. Emissions from new or proposed combustion equipment are based on their potential to emit. Air toxics emissions from other operations at the facility are based on the results of the 2022 Comprehensive Emission Inventory Report that was submitted to the AVAQMD in February of 2023.

What is the impact of the proposed coating operation on excess cancer risk?

A summary of the impact of the equipment associated with the permit action alone and in conjunction with all existing operations is presented below.

Type	Easting m	Northing m	Scenario	Sources	Excess Cancer Risk	
						per million
MEIR	403394	3834342	30 Year, (Resident), OEHHA Derived	Permit Action	1.98E-07	0.20
				2022 CEIR Sources	5.32E-06	5.32
				All	5.52E-06	5.52
			70 Year, (Resident), OEHHA Derived	Permit Action	2.29E-07	0.23
				2022 CEIR Sources	6.30E-06	6.30
				All	6.53E-06	6.53
			9 Year, (Resident), OEHHA Derived	Permit Action	1.57E-07	0.16
				2022 CEIR Sources	3.73E-06	3.73
				All	3.89E-06	3.89
MEIW	403000	3834400	25 Year (Worker), OEHHA Derived	Permit Action	1.73E-08	0.02
				2022 CEIR Sources	5.56E-07	0.56
				All	5.73E-07	0.57
PMI	40215	3834299	30 Year, (Resident), OEHHA Derived	Permit Action	6.60E-07	0.66
				2022 CEIR Sources	1.74E-05	17.43
				All	1.81E-05	18.09

Operation of the equipment associated with the permit action along with all other existing operations will result in an excess cancer risk of 5.52 in one million at the maximally exposed individual resident (MEIR). This estimate is based on the 30-year, derived OEHHA exposure scenario. Almost all of the increase in excess cancer risk is due to emissions of diesel engine particulate and hexavalent chromium. Emissions from the equipment associated with the permit action result in an estimated excess cancer risk of 0.20 in one million at the MEIR or about 3.6% of the total. Risk is largely due to emissions of cadmium, 7,12-dibenzo[a]anthracene, arsenic, strontium chromate, and PCBTF.

Operation of the equipment associated with the permit action along with all other existing operations will result in an excess cancer risk of 0.57 in one million at the maximally exposed individual worker (MEIW). This estimate is based on the 25-year, derived OEHHA exposure scenario. Again, almost all of the increase in excess cancer risk is due to emissions of diesel engine particulate and hexavalent chromium. Emissions from the equipment associated with the permit action result in an estimated excess cancer risk of 0.02 in one million at the MEIW or about 3.5% of the total.

Emissions from the Phase III paint hangar will be controlled by HEPA filtration that reduces particulate emissions such as hexavalent chromium by 99.99%. The paint hangar will also be equipped with a rotary concentrator/regenerative thermal oxidizer that will reduce volatile pollutant emissions by 96%. The requirements of Rule 1401 are met.

What is the impact of the Site 4 Expansion on the risk from chronic hazards

Operations associated with the permit action will emit chemicals that are listed by HARP as chronic hazards.

The impact of these sources in conjunction with existing equipment has been determined with results summarized below:

Type	Easting m	Northing m	Sources	MAX HI
MEIR	403394.0	3834342.0	Permit Action	0.0033
			2022 CEIR Sources	0.0157
			All	0.0190
MEIW	403000.3	3834400.0	Permit Action	0.0046
			2022 CEIR Sources	0.0165
			All	0.0211
PMI	402154.8	3834299.0	Permit Action	0.0104
			2022 CEIR Sources	0.0504
			All	0.0608

The impact of the new program on chronic hazard is minimal and satisfies the requirements for chronic risk imposed by Rule 1401.

What is the impact of the Site 4 Expansion on the risk from acute hazards

While an analysis of excess cancer risk or chronic hazards evaluates risk at locations for which there is a possibility of long-term exposure (the MEIR and MEIW), an acute analysis considers impacts at any location outside of the facility property line and are based on one-hour maximum emission rates. Results at the maximally exposed individual (MEI) are compared to a threshold value of one.

Coatings planned for use in equipment associated with the permit action contain chemicals that are listed by HARP as acute hazards. Other operations at the facility also result in the emissions of chemicals that contribute to acute hazard. These include operations that occur routinely throughout the year as well as those that occur quite sporadically. Sporadic emissions occur as the result of emergency IC engine, ground support equipment, and jet engine testing operations. For example, most IC engines are tested on a monthly basis for less than one hour.

The maximum acute hazard index at all locations outside of the control of Northrop or Air Force Plant 42 personnel occurs to the north of the facility property line. The acute hazard index at this location is estimated at 0.498 which is below the level at which no adverse acute hazard health impacts are expected to occur.

Conclusions

Operation of the proposed equipment included in the permit action will meet the requirements of AVAQMD Rule 1401.

2

INTRODUCTION

BACKGROUND

The Northrop Grumman Corporation (Northrop) operates aircraft manufacturing and repair facilities at Air Force Plant 42 Sites 3 and 4 in Palmdale, California. The Antelope Valley Air Quality Management District (AVAQMD) Facility ID is 01816.

Northrop is expanding its operations in Palmdale to include a new paint hangar. Emissions from the paint hangar will be controlled by a rotary concentrator and regenerative thermal oxidizer as well as an acid gas scrubber. The project will also include eight new natural gas fired boilers each rated at 6 mmBtu/hr as well as a natural gas fired emergency generator. The facility is also planning to replace the LPG fired emergency generator at the Site 3 lift station with a new LPG fired unit. It is also planning to replace an existing diesel fired emergency generator at B333 with new LPG fired unit.

The facility is submitting permit applications for the new paint hangar and associated equipment as well as for the new lift station generator and B333 generator.

Northrop is subject to AVAQMD Rule 1401. Rule 1401 imposes limits on the allowable excess cancer, chronic hazard, and acute hazard risks from a facility. The AVAQMD has requested that Northrop evaluate the impact of emissions from new or proposed equipment on the aggregate risk from facility operations. It must demonstrate that its emissions do not result in:

- an excess cancer risk greater than one in one million, or
- an excess cancer risk greater than ten in one million if the facility has applied Toxics – Best Available Control Technology (T-BACT);
- a chronic hazard index greater than one;
- an acute hazard index greater than one.

PROJECT DESCRIPTION

Northrop is implementing a new production program. The program has been implemented in three phases. Phase I involved the construction of building B421 which houses two paint booths identified as Booth 1 and Booth 3. Phase II involved the construction of a paint hanger located between B401 and B421. Equipment installed as part of Phase I and II are currently in operation and their emissions were included in the

2022 CEIR which was submitted to the AVAQMD in February 2023. Phase III involves construction of a second paint hangar to the north of the Phase II hangar. Particulate emissions from the Phase III hangar will be controlled by HEPA filtration. VOC emissions will be controlled by a rotary concentrator (RC) and regenerative thermal oxidizer (RTO). The RTO will be followed by an acid gas control system. Locations are also described in Figure 1.

The facility is also planning on installing eight 6 mmBtu/hr boilers and a natural gas fired emergency generator to support the coating operations. The facility will also be replacing an LPG fired emergency generator at the Site 4 sewer lift station with a new LPG fired generator and a diesel fired generator with an LPG fired unit at B/333 as part of this permit action.

A list of equipment and processes addressed as new equipment is provided in Table 1.

SITE DESCRIPTION

Location

The Northrop Grumman Corporation (Northrop) facility is located at 3520 East Avenue M in Palmdale within Air Force Plant 42. Plant 42 includes a number of government-owned contractor-operated sites (GOCOS). Northrop currently operates Sites 3 and 4 located along the northern portion of Plant 42. These sites are bounded by Avenue M to the North, Site 2 to the west, and U.S. Air Force property to the south and east. The locations of these facilities are described in Figure 2. Northrop also operates Site 7 and Site 8; however, activities at these sites are limited.

Land Use

Air Force Plant 42 includes landing facilities along with aircraft repair and maintenance operations at Sites 2, 3, 4, 7, and 8. Land to the north and east of Plant 42 is mostly agricultural. A small number of residences are located to the north of Avenue M. The land south of Plant 42 is in commercial use. The balance of the land is currently unoccupied. Land immediately to the east of Plant 42 is also currently unoccupied. Residential developments are located approximately 0.5 km to the east of Plant 42. Land use is described in Figure 3.

APPROACH

Health Risk Assessment

The purpose of this analysis is to demonstrate that operation of the proposed coating operations in conjunction with all other sources at Sites 3, 4, 7 and 8 will not result in an excess cancer risk, chronic hazard, or acute hazard in violation of the requirements of AVAQMD Rule 1401.

Emissions of chemicals listed under AB2588 are estimated as follows:

- Emissions from the proposed paint hangar are estimated from the volume of coatings that will be applied in the new coating operations and the chemical composition of each coating.
- Emissions from the new combustion equipment are based on their potential to emit (maintenance and testing hours only for emergency generators.)
- Emissions from all other existing operations are based on the emissions reported in the 2022 Comprehensive Emission Inventory Report that was submitted to the AVAQMD in February of 2023.

The excess cancer risk, chronic hazard, and acute hazard associated with emissions from these sources is calculated using the HARP2 Air Dispersion & Risk Tool (dated 22118) developed by ARB. ADMRT is used to store emission and source data, estimate exposure using the AERMOD dispersion model, and calculate risk using appropriate algorithms.

3

AIR TOXICS EMISSION INVENTORY

NEW COATING OPERATIONS

Emissions of toxic air contaminants from coating usage are calculated as:

$$Q_U = R_U \times Comp \times Factor \times FE \times \frac{(100 - CE)}{100}$$

where:

Q_U	=	Emissions from usage (lb)
R_U	=	Usage (gal)
Comp	=	Weight fraction of chemical of concern (lb/gal)
Factor	=	Factor to convert to AB2588 basis
FE	=	Fraction of chemical emitted
CE	=	Overall efficiency (%)

Emissions will depend on the state of the chemical component.

- Emissions of non-volatile chemicals such as hexavalent chromium are estimated assuming that 65% of the material is deposited on the part, 50% of the balance falls out onto the floor, and any remaining particulate is reduced by 99.997% by HEPA filtration.
- Emissions of volatile chemicals are estimated assuming that 100% of the material is volatilized as the coating is sprayed and cured. Volatile chemicals are not reduced by particulate filters but will be controlled by concentration followed by thermal oxidation. As much as 96% of the chemical will be controlled and not emitted.
- Certain chemicals are considered to be semi-volatile as they have low vapor pressures and will react with other components as the coating cures. The amount emitted will depend on vapor pressure, the surface area of the part, the cure rate and the surface area exposed to atmosphere. Any chemical that is emitted will also be controlled by the thermal oxidizer.

Criteria pollutant emissions from coating operations are provided in Table 2.

Chemical concentrations obtained from appropriate Safety Data Sheets and mix ratios are used to estimate the HAP content of the mixed materials. A list of chemicals that must be reported in the CEIR along with their potential health impacts are provided in Table 3.

The quantity of each chemical present in coatings that are to be used in these coating operations are provided in Table 4.

Non-volatile chemicals

Emissions of chemicals identified as non-volatile and subject to control by the HEPA filtration system are provided in Table 5. Emissions are estimated assuming all coating are applied with HVLP spray guns, transfer efficiency is 65%, as much as 50% of any overspray falls out prior to reaching the filters, and the filters reduce emissions by 99.97%.

Volatile chemicals

Emissions of chemicals identified as volatile and subject to removal by the RC and RTO are described in Tables 6 and 7. All of the volatile chemicals are assumed to be emitted from the coating operation either during spraying or as the coating cures. A least 96% of these volatile chemicals with be captured by the rotary concentrator. The balance will be emitted to the RC stack. Emissions are described in Table 6.

Chemicals captured by the RC will be desorbed and sent to the RTO which will provide at least 98% control. Emission estimates are provided in Table 7.

Two of the chemicals present in materials that will be used in these coating operations contain fluorine and chlorine which will convert to HF and HCl when combusted. These gases will be removed by an acid gas scrubber that is designed to provide 98% control. Emissions are described in Table 8.

Semi-volatile chemicals

A number of chemicals present in coatings are classified as semi-volatile since they have relatively low vapor pressures and will react with other chemicals as part of the curing process. These are isocyanate-based chemicals, a list of which is provided in Table 9 along with their vapor pressure when available.

There are two mechanisms by which these chemicals are emitted. Some unreacted chemical will be present in the paint overspray which will be controlled by the HEPA filters. A small amount of the chemical will also volatilize from the coated surface as the coating cures. American Chemistry Council, Center for the Polyurethanes Industry (CPI) has developed an approach to estimating emissions of toluene diisocyanate (TDI) and diphenylmethane diisocyanate (MDI) that considers both particulate losses as well as vaporization. The amount of material vaporized depends on the vapor pressure of the chemical, the surface area coated, wind speed, reaction rate, and time to cure.

Emissions of MDI and TDI were estimated using the TDI and MDI Estimator spreadsheets provided by the CPI along with appropriate estimates of surface area and cure time. These calculations were extended to other chemical species by using the appropriate vapor pressure and assuming an identical reaction rate. The quantity of each chemical released during coating operations is provided in Table 10. Emissions are described in Table 11.

Natural Gas-Fired Combustion

The control device included two small natural gas fired heaters. A 1.98 mmBtu/hr desorption heater will provide heated air used to desorb chemicals from the rotary concentrator. A second 1 mmBtu/hr heater is used to heat the RTO during startup. Once the RTO reaches temperature, all of the fuel needed to maintain temperature will be provided by the pollutant stream supplemented as necessary with natural gas.

Natural gas combustion will result in emissions of both criteria and HAP emissions. Fuel use is estimated in Table 12. Emissions are estimated assuming continuous operation at maximum rated capacity and appropriate emission factors. These data are presented in Table 13.

NATURAL GAS-FIRED HEATERS

The facility plans on installing eight 6 mmBtu/hr heaters to support the coating operations. Emissions from new natural gas fired heaters are estimated assuming continuous operation at maximum rated capacity and appropriate emission factors. Fuel consumption is estimated in Table 14. Annual and hourly emissions are estimated in Tables 15 and 16.

EMERGENCY GENERATORS

Coating operations will be supported by a natural gas fired IC engine. As part of this permit action, the facility also plans on replacing two existing emergency IC engines. An LPG fired engine located at the S4 sewer lift station (E006783) will be replaced by with new LPG fired engine. An existing diesel fired engine at B333 (E006780) will also be replaced with new LPG fired engine. Engine characteristics are described in Table 17.

Emissions from these engines have been estimated assuming operation at maximum rated capacity for up to 50 hours per year. Where available, emissions have been estimated using manufacturer's data. Otherwise, emissions have been estimated using AVAQMD default factors for 4-stroke, rich burn natural gas fired engines corrected as necessary to account for the higher heating value of LPG. Annual and hourly emission estimates are provided in Tables 18, 19, and 20.

EXISTING OPERATIONS

Emissions from existing operations are based on the data submitted to the AVAQMD in the 2022 CEIR report. Annual and hourly maximum emission estimates used are presented in Tables 21 and 22.

Diesel-Fueled Engine Emissions

Appendix D of the OEHHA Air Toxics Hot Spots Program Guidance Manual for the Preparation of Health Risk Assessments provides guidance on the calculation of risk

associated with diesel fueled engines. OEHHA describes the development of the inhalation non-cancer chronic reference exposure level and the inhalation cancer slope for diesel engine particulate and indicates that these non-cancer and cancer health factors were developed based on whole (gas and particulate matter) diesel exhaust. The surrogate for whole diesel exhaust is diesel PM. PM10 (particulate matter, ten microns or less in size) is the basis for the risk calculations.

The 2022 Comprehensive Emission Inventory Report reported diesel particulate as well as other components of diesel exhaust including PAH, heavy metals, and various organics such as benzene. In order to avoid including these other chemicals in the excess cancer risk calculation and overestimating the impact from diesel combustion, the emission inventory was updated to remove all chemicals except diesel engine particulate from associated equipment.

Short-term Emission Estimates

The risk assessment uses maximum hourly emissions in estimating acute impacts. A number of sources at Northrop are sporadic in nature and will occur for a limited number of hours during the year. These include emergency IC engines which are typically operated once a month for testing purposes. For that reason, the acute hazard from the Site 4 expansion was estimated in conjunction with emissions from all equipment known to operate on a more consistent basis. Emissions are provided in HARP database format in Appendix A as file HRA_AllCont_Acute.mdb.

4

HEALTH RISK ASSESSMENT

Health risk assessment is a process of quantitatively estimating the risk to human health caused by exposure to a given substance. The term is used to refer to a variety of methodologies with different applications but is generally divided into four components: hazard identification, exposure assessment, dose-response assessment, and risk characterization.

- Hazard identification refers to the identification of substances such as carcinogens, reproductive toxins, or acute toxins. After a substance is identified as a health hazard in this first step, the rest of the process is used to assess the magnitude of the hazard.

- Exposure assessment is the identification and quantification of all routes of human exposure to the substance, including inhalation, ingestion, and dermal absorption. This generally involves modeling the release and dispersion of air emissions to establish the number of people exposed, the concentrations to which they are exposed, and the duration of the exposure.

- Dose-response assessment is a process of establishing a quantitative relationship between the concentration to which a person is exposed and the change in the person's state of health due to that exposure. This relationship often takes the form of a unit risk factor (URF) for carcinogens and, for other toxic compounds, a reference exposure level (REL).

- Risk characterization is the integration of the exposure and dose-response assessments into a quantitative characterization of the human health risk posed by the exposure. For carcinogens, the risk is often characterized as the number of estimated excess cancer cases in the exposed population or the probability that the maximally exposed individual will incur cancer after a lifetime of exposure. For other toxins, the risk is characterized by comparing the exposure concentration to a level recognized as safe, such as the REL.

The term risk assessment is commonly used to refer to this entire process or to only a portion of it.

In order to determine whether emissions of air toxics could result in a significant exposure, it is necessary to:

- calculate air toxic emission rates,

- determine the maximum hourly average and annual average ground-level concentration of air toxics beyond the perimeter of the facility using U.S. EPA-approved air dispersion models, and

- assess the health risk due to exposure to these concentrations.

HAZARD IDENTIFICATION

Excess cancer risk, chronic hazard, and acute hazards are evaluated for all chemicals for which there is a cancer potency slope, chronic REL, or acute REL listed in the most recent version of the HARP health database. A list of these chemicals is also provided in Table 23.

AIR DISPERSION MODELING

The standard approach to determining the ground level concentration to which the population is exposed is through the use of air dispersion models. These models are complex mathematical routines that predict the ambient concentrations due to a particular emission.

Model Selection

Modeling was performed using the dispersion tools provided with the most recent version of ADMRT.

Meteorological data

The model was run using one full year of meteorological data gathered at Air Force Plant 42. The data was processed for use in AERMOD and made available on the ARB website. A windrose describing typical wind speeds and wind directions in the area is provided as Figure 4.

Land Use

For modeling purposes it is necessary to classify the land use in the area as either urban or rural. The Auer technique as recommended in the U.S. EPA Guideline on Air Quality Models (revised) was used. The area within a three-kilometer radius of the facility was identified on a USGS topographical map and was delineated by land use type. The area was determined to be rural.

Receptor Grid

The receptor field used in the assessment included grid receptors spaced at 200-meter intervals, property boundary receptors located at 50-meter intervals, sensitive receptors located at nearby residences and work sites, and population receptors. Receptor elevations were estimated using DEM data obtained from USGS. The locations of these receptors are described in Figure 5. The receptors were also characterized as representing residential, commercial, or unoccupied areas around the facility.

Source Characteristics

A list of all sources considered in the health risk assessment is provided in Table 24. These sources have been modeled as either point or volume sources.

Point Sources

Emissions from stationary sources such as boilers, IC engines, and paint booths were modeled as point sources. Fugitive emissions from sources such as material use in open areas have also been modeled as point sources assuming that emissions exit from a vent located near the center of each building. Stack height is based on the height of the building. A list of point sources included in the modeling analysis is provided in Table 14. Information of the height and diameter of equipment stacks as well as on the flue gas exit temperature and exit velocity was obtained from Northrop personnel.

Dispersion from a point source can be affected by the presence of nearby buildings. These downwash effects were incorporated into the modeling analysis based on parameters developed using the Building Profile Input Program (BPIP) obtained from U.S. EPA. The locations of building incorporated into the downwash analysis are described in Figure 6. Building heights are described in Table 25. These data were loaded into HARP.

Volume Sources

Fugitive emissions from fuel dispensing operations have been modeled as volume sources following guidance from CAPCOA. A list of sources modeled as volume sources is provided in Table 24.

Model Options

The model was run using regulatory default options.

Modeling Results

Long-term Impacts

Excess cancer risk and chronic hazard risk assessments are based on annual average concentration estimates. This can be determined by modeling each source separately using a unit emission rate of 1 g/s. The annual average concentration of a chemical at its actual emission rate is calculated as the product of the dispersion coefficient and the actual emission.

Short-term Impacts

Acute hazard estimates are based on short-term impacts typically measured over one or more hours. These impacts have been determined for each individual chemical that has been identified as an acute hazard by modeling actual hourly emissions from all sources simultaneously.

RISK CHARACTERIZATION

Excess Cancer Risk

The excess cancer risk associated with the emission from the new coating operations and IC engines in conjunction with emissions from other equipment in use at the site was determined at all receptors included in the dispersion modeling study. This included receptors where the land use is residential or commercial as well as receptors at locations that are currently and will continue to be unoccupied. Excess cancer risk was calculated using the algorithms and procedures built into HARP.

Residential Exposure

Excess cancer risk at residential locations is calculated using the OEHHA-derived adjusted analysis method and default exposure pathways. Exposure pathways considered include inhalation, dermal contact, soil ingestion, and mother's milk. Deposition was assumed equal to the default rate of 0.02 m/s for controlled sources. Pathways considered as incomplete include drinking water, fish, beef/dairy, home-grown produce, and pig/chickens/egg as there are no water bodies, pastureland, or pig/chicken farming operations within the zone of impact.

The excess cancer risk associated with emissions from the new coating operations and IC engines combined with emissions reported in the 2022 CEIR is described in Table 26 as well as in Figure 7. The risk at the MEIR which is a farmhouse located to the east of Site 4 off of Avenue M is estimated at 5.32 in one million based on a 30-year exposure, OEHHA derived risk scenario. Emissions from the permit action account for a risk of 0.20 in one million or about 3.6% of the combined risk. The location of the MEIR is also described in Figure 7.

A breakdown of risk contribution by chemical from all sources and from sources associated with the permit action is provided in Tables 27 and 28. Over 95% of the risk from the equipment associate with the permit action is associated with emissions of cadmium, 7,12-dibenzoanthracene, arsenic, and strontium chromate, PCBTF, cobalt, and nickel. When all sources are considered, diesel engine particulate contributes 68.17% of the excess cancer risk while hexavalent chromium and strontium chromate contribute an additional 16.38%.

Worker/Offsite Exposure

Excess cancer risk at commercial and offsite locations is calculated using the 25 year (worker), OEHHA derived analysis method. An offsite location is an area outside of the property controlled by Northrop at which the likelihood of any prolonged exposure is insignificant. Exposure pathways considered at commercial and offsite locations include inhalation, dermal contact, and soil ingestion. Deposition was assumed equal to the default rate of 0.02 m/s for controlled sources. Pathways considered as incomplete include drinking water, mother's milk, home-grown produce, fish, beef/dairy, and pig/chickens/egg.

The excess cancer risk at the MEIW associated with equipment associated with the permit action with emissions from all other sources is described in Table 26. The MEIW is a lot located to the northeast of the Northrop property that was used for agricultural operations but which is currently being developed as a warehousing operation. Risk from all sources is estimated at 0.57 in one million. A breakdown of risk contribution by chemical from all sources and from sources associated with the permit expansion is provided in Tables 29 and 30.

Exposure at the PMI

The excess cancer risk at the MEIW associated with equipment associated with the permit action with emissions from all other sources is described in Table 26. The MEI is located along the facility's northern property boundary. The risk from all sources is estimated at 17.4 in one million, however, there is no potential for long term exposure at this location. A breakdown of risk contribution by chemical from all sources and from sources associated with the permit expansion is provided in Tables 31 and 32.

Cancer Burden

The excess cancer burden associated with emissions cancer from the Site 4 Expansion in conjunction with all other sources currently in operation at Northrop is estimated at 0.044. The cancer burden report prepared by HARP is provided as Appendix A.

Chronic Hazard

Coatings planned for use in the new coating lines contain chemicals that are listed by HARP as chronic hazards. These are identified along with their target end points in Table 23. The potential for chronic health effects is estimated by comparing the estimated long-term exposures with Reference Exposure Levels (RELs) provided by OEHHA. The long-term exposure is calculated from the annual average concentration determined in the dispersion modeling analysis. A hazard index is calculated for each target organ for which an effect is known or suspected to occur. A hazard index less than one indicates that no adverse chronic health effects are anticipated.

The chronic hazard index associated with the emission from the new coating operations in conjunction with emissions from other permitted equipment was determined at all receptors included in the dispersion modeling study. This included receptors where the land use is residential or commercial as well as receptors at locations that are currently and will continue to be unoccupied. Chronic hazard was calculated using the algorithms and procedures built into ADMRT.

Residential Exposure

The chronic hazard at residential locations is calculated using the OEHHA derived analysis and default exposure pathways. Exposure pathways considered include inhalation, dermal contact, soil ingestion, and mother's milk. Deposition was assumed equal to the default rate of 0.02 m/s for controlled sources. Pathways considered as incomplete include drinking water, home-grown produce, fish, beef/dairy, and pig/chickens/egg as

there are no water bodies, pastureland, or pig/chicken farming operations within the zone of impact.

The chronic hazard associated with emissions from permit action operations alone as well as in conjunction with existing sources is described in Table 34. Impacts are minimal. The maximum chronic hazard index was estimated at 0.019. The chronic hazard index associated with emissions from equipment associated with the permit action at the MEIR was 0.00328. Risk isopleths associated with residential exposure to emissions from all sources are described in Figure 9 along with the location of the MEIR, MEIW, and MEI.

A breakdown of chronic hazard at the MEIR by chemical for all sources and for sources associated with the permit action is provided in Tables 35 and 36.

Worker/Offsite Exposure

Chronic hazard at commercial and offsite locations is calculated using the OEHHA Derived methodology. Exposure pathways considered at commercial and offsite locations include inhalation, dermal contact, and soil ingestion. Deposition was assumed equal to the default rate of 0.02 m/s for controlled sources. Pathways considered as incomplete include drinking water, mother's milk, home-grown produce, fish, beef/dairy, and pig/chickens/egg. Unlike excess cancer risk, there is no adjustment for the duration of exposure when calculating chronic hazard.

The chronic hazard at the MEIW and MEI associated with the permit action emissions alone and in conjunction with emissions from all existing sources under each operating scenario is described in Table 34. Again, chronic hazard risk is minimal.

Acute Hazard

Operation of equipment associated with the permit action will result in emissions of chemicals that are listed by HARP as acute hazards. These are identified in Table 37 along with target end points.

The potential for acute health effects is estimated by comparing the appropriate short term exposures with Reference Exposure Levels (RELs) provided by OEHHA. A hazard index is calculated for each target organ for which an acute effect is known or suspected to occur. A hazard index less than one indicates that no adverse acute health effects are anticipated.

The acute hazard index associated with the emission from equipment associated with the permit action alone and in conjunction with emissions from other continuously operating sources was determined at all receptors included in the dispersion modeling study. Results are summarized in Table 38. Since acute hazard is associated with short term impacts and exposure could occur at any location not within the control of Northrop, no distinction is made between offsite, residential, and commercial receptors. Receptors located to the south of Site 3 and Site 4 on property which is part of the AFP-42 flightline

were excluded from the analysis as this area is under strict control. Only the inhalation pathway is considered is assessing acute risk.

Acute hazard is first assessed using a screening analysis which assumes that all equipment at the site is in operation at its maximum rated capacity for every hour of the year and that the impact from each source at the MEI occurs during the worst one-hour period for that piece of equipment. The acute hazard determined using this screening approach associated with emissions from the permit action operations in conjunction with existing continuously operating equipment is estimated at 0.857. The MEI is located along the northern Site 4 property line. The impact of permit action equipment emissions on acute hazard index at this location is only 0.241. The MEI associated with permit action emissions only is located along the western Site 3 property line. The associated acute hazard index is 0.8787.

A breakdown of impacts by chemical at the MEI for all sources and for equipment associated with the permit action is provided in Tables 39 and 40. Hexamethylene diisocyanate, arsenic, acrolein, formaldehyde, and nickel are significant contributors to risk from all sources. Acrolein, formaldehyde, hydrofluoric acid, and benzene are significant contributors to risk from permit action sources. Risk isopleths associated with exposure to all modeled emissions are described in Figure 10 along with the location of the MEI.

A refined acute hazard assessment was carried out in order to obtain a better estimate of acute hazard. While the refined assessment continues to assume that all equipment including emergency IC engines, ground support equipment, and jet engine testing operations are operating at their maximum rated capacity, impacts are assessed for each hour of the year to determine the actual worst-case hour. The acute hazard at the MEIW based on this refined estimate was 0.498, less that half the level below which no acute health impacts are expected.

All files associated with this health risk assessment are available from the facility.

5

CONCLUSIONS

Excess Cancer Risk

The results of the air dispersion analysis and health risk assessment indicate that emissions from the permit action equipment in conjunction with those from all other existing sources as well as from new or proposed equipment will not result in an excess cancer risk exceeding ten in one million at any residential or commercial receptor. Since the new paint hangar will be equipped with T-BACT, these sources meet the requirements of Rule 1401.

Chronic Health Effects

The results of the air dispersion analysis and health risk assessment indicate that non-cancer health effects resulting from emissions from the proposed coating equipment in conjunction with those from all other existing sources as well as from new or proposed equipment will not result in any adverse chronic health effects.

Acute Health Effects

The results of the air dispersion analysis and health risk assessment indicate that non-cancer health effects resulting from emissions from the proposed coating equipment in conjunction with those from all other sources will not result in any adverse chronic health effects.

Table 1: New equipment being added to the Northrop Grumman Palmdale facility

Source	Device ID	Process ID	Process name	SCC Code	Stack ID
Paint Hanger	999001	1	Coating Use	40299998	999001
		2	Natural Gas Combustion	10200603	999001
		3	Coating Use	40299998	999002
		4	PCBTF Combustion	40299998	999002
		5	Natural Gas Combustion	10200603	999002
Boiler 1	999003	1	External Combustion, Natural Gas	10200603	999003
Boiler 2	999004	1	External Combustion, Natural Gas	10200603	999004
Boiler 3	999005	1	External Combustion, Natural Gas	10200603	999005
Boiler 4	999006	1	External Combustion, Natural Gas	10200603	999006
Boiler 5	999007	1	External Combustion, Natural Gas	10200603	999007
Boiler 6	999008	1	External Combustion, Natural Gas	10200603	999008
Boiler 7	999009	1	External Combustion, Natural Gas	10200603	999009
Boiler 8	999010	1	External Combustion, Natural Gas	10200603	999010
Emergency Generator	999011	1	Internal Combustion, Natural Gas	20200253	999011
Lift Station Generator	999012	1	Internal Combustion, LPG	20201012	999012
B333 Generator	999013	1	Internal Combustion, LPG	20201012	999013

Table 2: Criteria emissions from Phase III coating operations

Pollutant	Pol ID	CE	Emissions (lb/year)	
			Uncontrolled	Controlled
NOx	42603	0	0	0
SOx	42401	0	0	0
CO	42101	0	0	0
PM	11101	99.997	4893	7.3395E-05
PM-Filterable	11105	99.997	4893	7.3395E-05
PM10	85101	99.997	4893	7.3395E-05
PM10-Filterable	85105	99.997	4893	7.3395E-05
PM2.5	88101	99.997	4893	7.3395E-05
PM2.5-Filterable	88105	99.997	4893	7.3395E-05
VOC	43101	96.000	78079	3123.16
Lead	12128	99.997	0	0
Ammonia-Crit	42604	0	0	0

Table 3: AB2588 listed chemicals present in coatings to be used in Phase III operations

CAS	Chemical Name	Listed as			Health Effects		
		CAS	Pollutant Name	Type	Cancer	Chronic	Acute
50-00-0	FORMALDEHYDE	50000	Formaldehyde	Volatile	x	x	x
67-56-1	METHANOL	67561	Methanol	Volatile		x	x
67-63-0	ISOPROPYL ALCOHOL	67630	Isopropyl alcohol	Volatile		x	x
71-36-3	N-BUTYL ALCOHOL	71363	n-Butyl alcohol	Volatile			
78-92-2	SEC-BUTYL ALCOHOL	78922	sec-Butyl alcohol	Volatile			
78-93-3	METHYL ETHYL KETONE	78933	Methyl ethyl ketone {2-Butanone}	Volatile			x
80-05-7	4,4-ISOPROPYLIDENEDIPHENOL	80057	4,4'-Isopropylidenediphenol	Volatile			
95-63-6	1,2,4-TRIMETHYLBENZENE	95636	1,2,4-Trimethylbenzene	Volatile			
98-56-6	PARACHLOROBENZOTRIFLUORIDE	98566	1-Chloro-4-(trifluoromethyl)benzene [PCBTF]	Volatile	x		
100-41-4	ETHYLBENZENE	100414	Ethyl benzene	Volatile	x	x	
101-68-8	METHYLENEBIS (PHENYLISO CYANATE) (MBI)	101688	Methylene diphenyl diisocyanate {MDI}	Semi-volatile		x	x
108-10-1	METHYL ISOBUTYL KETONE	108101	Methyl isobutyl ketone {Hexone}	Volatile			
108-65-6	PROPYLENE GLYCOL METHYL ETHER ACETATE	108656	Propylene glycol monomethyl ether acetate	Volatile			
108-88-3	TOLUENE	108883	Toluene	Volatile		x	x
540-88-5	TERT BUTYL ACETATE	540885	t-Butyl acetate	Volatile	x		
584-84-9	TOLUENE DIISOCYANATE - 2,4	584849	Toluene-2,4-diisocyanate	Semi-volatile	x	x	x
822-06-0	HEXAMETHYLENE DIISOCYANATE - 1,6	822060	Hexamethylene-1,6-diisocyanate	Semi-volatile		x	x
1308-38-9	CHROMIUM (III) OXIDE	16065831	Chromium(III) Compounds	Non-volatile		x	x
1330-20-7	XYLENE (MIXED ISOMERS)	1330207	Xylenes (mixed)	Volatile		x	x
2536-05-2	2,2-DIPHENYLMETHANE DIISOCYANATE	1219	Diisocyanates	Semi-volatile			
4098-71-9	ISOPHORONE DIISOCYANATE	4098719	Isophorone diisocyanate {IPDI}	Semi-volatile			
5873-54-1	DIPHENYLMETHANE-2,4-DIISOCYANATE ISOCYANIC ACID	1219	Diisocyanates	Semi-volatile			
7440-22-4	SILVER	7440224	Silver	Non-volatile			
7789-06-2	STRONTIUM CHROMATE	7789062	Strontium chromate	Non-volatile	x	x	
8048-07-5	CADMIUM ZINC SULFIDE	7440439	Cadmium and Cadmium Compounds	Non-volatile	x	x	
		7440666	Zinc and coumpounds	Non-volatile			
9016-87-9	POLYMER, DIPHENYLMETHANE DIISOCYANATE	1219	Diisocyanates	Semi-volatile			
10294-40-3	BARIUM CHROMATE	10294403	Barium chromate	Non-volatile	x	x	
14808-60-7	SILICA, CRYSTALLINE QUARTZ	14808607	Silica, crystalline (respirable), in the form of quartz	Non-volatile		x	
24801-88-5	3-Isocyanatopropyltriethoxysilane	1125	Isocyanates	Semi-volatile			
25265-71-8	DIPROPYLENE GLYCOL	25265718	Dipropylene glycol	Volatile			
26426-91-5	1,6-diisocyanatohexane; 2,4-diisocyanato-1-methylbenzene	1221	Polymeric (Oligo) HDI	Semi-volatile		x	x
26447-40-5	DIPHENYLMETHANE DIISOCYANATE (MDI)	1219	Diisocyanates	Semi-volatile			
26471-62-5	TOLUENE DIISOCYANATE (ISOMERS)	584849	Toluene-2,4-diisocyanate	Semi-volatile	x	x	x
28182-81-2	POLYMER OF HDI	1221	Polymeric (Oligo) HDI	Semi-volatile		x	x

Table 4: The quantity of AB2588 listed chemicals present in coatings to be sued in Phase II operations

CAS	Chemical Name	Quantity Used		Listed as		Type	Adj	COC Use	
		per shipset	per year	CAS	Pollutant Name		Factor	lb/yr	lb/hr
50-00-0	FORMALDEHYDE	0.01	0.06	50000	Formaldehyde	Volatile	1	0.06	0.005
67-56-1	METHANOL	5.52	66.19	67561	Methanol	Volatile	1	66.19	0.225
67-63-0	ISOPROPYL ALCOHOL	98.42	1181.01	67630	Isopropyl alcohol	Volatile	1	1181.01	4.101
71-36-3	N-BUTYL ALCOHOL	0.98	11.71	71363	n-Butyl alcohol	Volatile	1	11.71	0.151
78-92-2	SEC-BUTYL ALCOHOL	4.57	54.87	78922	sec-Butyl alcohol	Volatile	1	54.87	2.770
78-93-3	METHYL ETHYL KETONE	115.67	1388.02	78933	Methyl ethyl ketone {2-Butanone}	Volatile	1	1388.02	8.063
80-05-7	4,4-ISOPROPYLIDENEDIPHENOL	0.36	4.33	80057	4,4'-Isopropylidenediphenol	Volatile	1	4.33	0.090
95-63-6	1,2,4-TRIMETHYLBENZENE	0.47	5.60	95636	1,2,4-Trimethylbenzene	Volatile	1	5.60	0.169
98-56-6	PARACHLOROBENZOTRIFLUORIDE	283.81	3405.70	98566	1-Chloro-4-(trifluoromethyl)benzene [PCBTF]	Volatile	1	3405.70	72.702
100-41-4	ETHYLBENZENE	90.39	1084.72	100414	Ethyl benzene	Volatile	1	1084.72	18.084
101-68-8	METHYLENEBIS (PHENYLISO CYANATE) (MBI)	78.08	936.97	101688	Methylene diphenyl diisocyanate {MDI}	Semi-volatile	1	936.97	5.784
108-10-1	METHYL ISOBUTYL KETONE	2251.31	27015.77	108101	Methyl isobutyl ketone {Hexone}	Volatile	1	27015.77	87.623
108-65-6	PROPYLENE GLYCOL METHYL ETHER ACETATE	505.11	6061.32	108656	Propylene glycol monomethyl ether acetate	Volatile	1	6061.32	67.107
108-88-3	TOLUENE	1.50	17.97	108883	Toluene	Volatile	1	17.97	1.363
540-88-5	TERT BUTYL ACETATE	4.55	54.66	540885	t-Butyl acetate	Volatile	1	54.66	2.886
584-84-9	TOLUENE DIISOCYANATE - 2,4	1.10	13.21	584849	Toluene-2,4-diisocyanate	Semi-volatile	1	13.21	0.147
822-06-0	HEXAMETHYLENE DIISOCYANATE - 1,6	1.29	15.44	822060	Hexamethylene-1,6-diisocyanate	Semi-volatile	1	15.44	0.147
1308-38-9	CHROMIUM (III) OXIDE	0.00	0.05	16065831	Chromium(III) Compounds	Non-volatile	1	0.05	0.004
1330-20-7	XYLENE (MIXED ISOMERS)	310.76	3729.12	1330207	Xylenes (mixed)	Volatile	1	3729.12	60.376
2536-05-2	2,2-DIPHENYLMETHANE DIISOCYANATE	1.77	21.29	1219	Diisocyanates	Semi-volatile	1	21.29	0.131
5873-54-1	DIPHENYLMETHANE-2,4-DIISOCYANATE ISOCYANIC ACID	8.87	106.47	1219	Diisocyanates	Semi-volatile	1	106.47	0.657
7440-22-4	SILVER	1280.65	15367.78	7440224	Silver	Non-volatile	1	15367.78	170.117
7789-06-2	STRONTIUM CHROMATE	75.88	910.51	7789062	Strontium chromate	Non-volatile	1	910.51	5.434
8048-07-5	CADMIUM ZINC SULFIDE	0.00	0.05	7440439	Cadmium and Cadmium Compounds	Non-volatile	0.4	0.05	0.004
8048-07-5	CADMIUM ZINC SULFIDE	0.00	0.05	7440666	Zinc and coumpounds	Non-volatile	0.4	0.05	0.004
9016-87-9	POLYMER, DIPHENYLMETHANE DIISOCYANATE	88.73	1064.74	1219	Diisocyanates	Semi-volatile	1	1064.74	6.572
10294-40-3	BARIUM CHROMATE	7.39	88.64	10294403	Barium chromate	Non-volatile	1	88.64	0.543
14808-60-7	SILICA, CRYSTALLINE QUARTZ	112.48	1349.74	14808607	Silica, crystalline (respirable)	Non-volatile	1	1349.74	25.035
24801-88-5	3-Isocyanatopropyltriethoxysilane	0.13	1.51	1125	Isocyanates	Semi-volatile	1	1.51	0.032
25265-71-8	DIPROPYLENE GLYCOL	1.20	14.44	25265718	Dipropylene glycol	Volatile	1	14.44	0.263
26426-91-5	1,6-diisocyanatohexane; 2,4-diisocyanato-1-methylbenzene	165.08	1981.00	1221	Polymeric (Oligo) HDI	Semi-volatile	1	1981.00	22.011
26447-40-5	DIPHENYLMETHANE DIISOCYANATE (MDI)	8.16	97.96	1219	Diisocyanates	Semi-volatile	1	97.96	0.605
28182-81-2	POLYMER OF HDI	15.82	189.84	1221	Polymeric (Oligo) HDI	Semi-volatile	1	189.84	2.835
	Isocyanate Terminated Prepolymer	214.33	2571.99	1219	Diisocyanates	Semi-volatile	1	2571.99	57.155
	Isocyanate terminated polytetramethylene glycol prepolymer	133.68	1604.18	1219	Diisocyanates	Semi-volatile	1	1604.18	29.167

Table 5: Emissions of non-volatile chemicals from coating operations equipped with HEPA filttration

CAS	Chemical Name	Quantity Used		Listed as		Adj	COC Use		TE	FF	HEPA	Emissions (lb/yr)		Emissions (lb/hr)	
		per shipset	per year	CAS	Pollutant Name	Factor	lb/yr	lb/hr			Control	No Ctrl	After Ctrl	No Ctrl	After Ctrl
1308-38-9	CHROMIUM (III) OXIDE	0.0042	0.05	16065831	Chromium(III) Compounds	1	0.1	0.004	0.65	0.5	0.9997	0.01	2.63E-06	0.0007	2.19E-07
7440-22-4	SILVER	1280.6484	15367.78	7440224	Silver	1	15367.8	170.117	0.65	0.5	0.9997	2689.36	8.07E-01	29.7705	8.93E-03
7789-06-2	STRONTIUM CHROMATE	75.8759	910.51	7789062	Strontium chromate	1	910.5	5.434	0.65	0.5	0.9997	159.34	4.78E-02	0.9510	2.85E-04
8048-07-5	CADMIUM ZINC SULFIDE	0.0042	0.05	7440439	Cadmium and Cadmium Cpds	0.4	0.1	0.004	0.65	0.5	0.9997	0.01	2.63E-06	0.0007	2.19E-07
8048-07-5	CADMIUM ZINC SULFIDE	0.0042	0.05	7440666	Zinc and coumpounds	0.4	0.1	0.004	0.65	0.5	0.9997	0.01	2.63E-06	0.0007	2.19E-07
10294-40-3	BARIUM CHROMATE	7.3864	88.64	10294403	Barium chromate	1	88.6	0.543	0.65	0.5	0.9997	15.51	4.65E-03	0.0951	2.85E-05
14808-60-7	SILICA, CRYSTALLINE QUARTZ	112.4781	1349.74	14808607	Silica, crystalline (respirable)	1	1349.7	25.035	0.65	0.5	0.9997	236.20	7.09E-02	4.3811	1.31E-03

Table 6: Emissions of volatile chemicals from the rotary concentrator

CAS	Chemical Name	Quantity Used lb per		Listed as		COC Use		Rotary Concentrator				
				CAS	Pollutant Name			Capture	COC to Stack		COC to RTO	
		shipset	year			lb/yr	lb/hr		lb/yr	lb/hr	lb/yr	lb/hr
50-00-0	Formaldehyde	0.005	0.06	50000	Formaldehyde	0.06	0.01	0.96	0.002	2.01E-04	0.06	0.00
67-56-1	Methanol	5.516	66.19	67561	Methanol	66.2	0.23	0.96	2.65	9.01E-03	63.55	0.22
67-63-0	Isopropyl alcohol	98.418	1181.01	67630	Isopropyl alcohol	1181.0	4.10	0.96	47.24	1.64E-01	1133.77	3.94
71-36-3	n-Butyl alcohol	0.976	11.71	71363	n-Butyl alcohol	11.7	0.15	0.96	0.47	6.04E-03	11.25	0.14
78-92-2	sec-Butyl alcohol	4.573	54.87	78922	sec-Butyl alcohol	54.9	2.77	0.96	2.19	1.11E-01	52.68	2.66
78-93-3	Methyl ethyl ketone	115.668	1388.02	78933	Methyl ethyl ketone {2-Butanone}	1388.0	8.06	0.96	55.52	3.23E-01	1332.50	7.74
80-05-7	4,4'-Isopropylidenediphenol	0.361	4.33	80057	4,4'-Isopropylidenediphenol	4.3	0.09	0.96	0.17	3.61E-03	4.15	0.09
95-63-6	1,2,4-Trimethylbenzene	0.467	5.60	95636	1,2,4-Trimethylbenzene	5.6	0.17	0.96	0.22	6.76E-03	5.38	0.16
98-56-6	Parachlorobenzotrifluoride	283.808	3405.70	98566	1-Chloro-4-(trifluoromethyl)benzene [PCBTF]	3405.7	72.70	0.96	136.23	2.91E+00	3269.47	69.79
100-41-4	Ethyl benzene	90.393	1084.72	100414	Ethyl benzene	1084.7	18.08	0.96	43.39	7.23E-01	1041.33	17.36
108-10-1	Methyl isobutyl ketone {Hexone}	2251.314	27015.77	108101	Methyl isobutyl ketone {Hexone}	27015.8	87.62	0.96	1080.63	3.50E+00	25935.14	84.12
108-65-6	Propylene glycol monomethyl ether acetate	505.110	6061.32	108656	Propylene glycol monomethyl ether acetate	6061.3	67.11	0.96	242.45	2.68E+00	5818.87	64.42
108-88-3	Toluene	1.497	17.97	108883	Toluene	18.0	1.36	0.96	0.72	5.45E-02	17.25	1.31
540-88-5	t-Butyl acetate	4.555	54.66	540885	t-Butyl acetate	54.7	2.89	0.96	2.19	1.15E-01	52.47	2.77
1330-20-7	Xylenes (mixed)	310.760	3729.12	1330207	Xylenes (mixed)	3729.1	60.38	0.96	149.16	2.42E+00	3579.95	57.96
25265-71-8	Dipropylene glycol	1.203	14.44	25265718	Dipropylene glycol	14.4	0.26	0.96	0.58	1.05E-02	13.86	0.25

Table 7: Emissions from the RTO

CAS	Chemical Name	Listed as		COC to RTO		Control	Emissions	
		CAS	Pollutant Name	lb/yr	lb/hr		lb/yr	lb/hr
50-00-0	FORMALDEHYDE	50000	Formaldehyde	0.06	0.00	0.98	0.001	9.66E-05
67-56-1	METHANOL	67561	Methanol	63.55	0.22	0.98	1.271	4.33E-03
67-63-0	ISOPROPYL ALCOHOL	67630	Isopropyl alcohol	1133.77	3.94	0.98	22.675	7.87E-02
71-36-3	N-BUTYL ALCOHOL	71363	n-Butyl alcohol	11.25	0.14	0.98	0.225	2.90E-03
78-92-2	SEC-BUTYL ALCOHOL	78922	sec-Butyl alcohol	52.68	2.66	0.98	1.054	5.32E-02
78-93-3	METHYL ETHYL KETONE	78933	Methyl ethyl ketone {2-Butanone}	1332.50	7.74	0.98	26.650	1.55E-01
80-05-7	4,4-ISOPROPYLIDENEDIPHENOL	80057	4,4'-Isopropylidenediphenol	4.15	0.09	0.98	0.083	1.73E-03
95-63-6	1,2,4-TRIMETHYLBENZENE	95636	1,2,4-Trimethylbenzene	5.38	0.16	0.98	0.108	3.24E-03
98-56-6	PARACHLOROBENZOTRIFLUORIDE	98566	1-Chloro-4-(trifluoromethyl)benzene [PCBTF]	3269.47	69.79	0.98	65.389	1.40E+00
100-41-4	ETHYLBENZENE	100414	Ethyl benzene	1041.33	17.36	0.98	20.827	3.47E-01
108-10-1	METHYL ISOBUTYL KETONE	108101	Methyl isobutyl ketone {Hexone}	25935.14	84.12	0.98	518.703	1.68E+00
108-65-6	PROPYLENE GLYCOL METHYL ETHER ACETAT	108656	Propylene glycol monomethyl ether acetate	5818.87	64.42	0.98	116.377	1.29E+00
108-88-3	TOLUENE	108883	Toluene	17.25	1.31	0.98	0.345	2.62E-02
540-88-5	TERT BUTYL ACETATE	540885	t-Butyl acetate	52.47	2.77	0.98	1.049	5.54E-02
1330-20-7	XYLENE (MIXED ISOMERS)	1330207	Xylenes (mixed)	3579.95	57.96	0.98	71.599	1.16E+00
25265-71-8	DIPROPYLENE GLYCOL	25265718	Dipropylene glycol	13.86	0.25	0.98	0.277	5.04E-03

Table 8: Emissions of HCl and HF resulting from the combustion of Parachlorobenzotrifluoride and trifluoropropylmethyl

CAS	Chemical Name	COC Used		COC to RTO		Byproduct	Conv Factor	Uncontrolled Emissions		Scrubber	Emissions	
		lb/yr	lb/hr	lb/yr	lb/hr		lb/lb	lb/yr	lb/hr	CE	lb/yr	lb/hr
98-56-6	PARACHLOROBENZOTRIFLUORIDE	3405.70	72.70	3269.47	69.79	HF	0.37037	1210.91	27.21	98	24.22	0.54
98-56-6	PARACHLOROBENZOTRIFLUORIDE	3405.70	72.70	3269.47	69.79	HCl	0.11111	363.27	8.21	98	7.27	0.16
2374-14-3	TRIFLUOROPROPYLMETHYL	7.77	0.160	7.46	0.154	HF	0.37037	2.76	0.06	98	0.06	0.00
Total						HF		1213.68	27.27		24.27	0.54
						HCl		363.27	8.21		7.27	0.16

Table 9: Semi-volatile chemicals present in coatings to be used in Phase III operations

CAS	Chemical Name	Quantity Used in lb per		Listed as		VP		COC Use	
		shipset	year	CAS	Pollutant Name	mmHg	at Temp	lb/yr	lb/hr
24801-88-5	3-Isocyanatopropyltriethoxysilane	0.12601293	1.512155187	1125	Isocyanates	1	68 Deg F	1.5	0.032
822-06-0	HEXAMETHYLENE DIISOCYANATE - 1,6	1.28628898	15.4354678	822060	Hexamethylene-1,6-diisocyanate	0.05	68 Deg F	15.4	0.147
584-84-9	TOLUENE DIISOCYANATE - 2,4	1.10055641	13.20667687	584849	Toluene-2,4-diisocyanate	0.01	70 Deg F	13.2	0.147
101-68-8	METHYLENEBIS (PHENYLISO CYANATE) (MDI)	78.0807866	936.9694394	101688	Methylene diphenyl diisocyanate {MDI}	0.000005	77 Deg F	937.0	5.784
26447-40-5	DIPHENYLMETHANE DIISOCYANATE (MDI)	8.16299133	97.95589594	101688	Methylene diphenyl diisocyanate {MDI}	0.000005	77 Deg F	98.0	0.605
2536-05-2	2,2-DIPHENYLMETHANE DIISOCYANATE	1.77456333	21.29475999	1219	Diisocyanates	0.000005	77 Deg F	21.3	0.131
5873-54-1	DIPHENYLMETHANE-2,4-DIISOCYANATE ISOCYANIC ACID	8.87281666	106.4737999	1219	Diisocyanates	0.000005	77 Deg F	106.5	0.657
26426-91-5	1,6-diisocyanatohexane; 2,4-diisocyanato-1-methylbenzene	165.083461	1981.00153	1221	Polymeric (Oligo) HDI	5.2E-09	68 Deg F	1981.0	22.011
28182-81-2	POLYMER OF HDI	15.8201373	189.8416473	1221	Polymeric (Oligo) HDI	5.2E-09	68 Deg F	189.8	2.835
9016-87-9	POLYMER, DIPHENYLMETHANE DIISOCYANATE	88.7281666	1064.737999	1219	Diisocyanates	5.2E-09	68 Deg F (1)	1064.7	6.572
CAS-0099	Isocyanate Terminated Prepolymer	214.332665	2571.991981	1219	Diisocyanates	5.2E-09	69 Deg F (1)	2572.0	57.155
CAS-0999	Isocyanate terminated polytetramethylene glycol prepolymer	133.682039	1604.184466	1219	Diisocyanates	5.2E-09	70 Deg F (1)	1604.2	29.167

(1) No vapor pressure data available. Assumed to be the same as for polymer of HDI

Table 10: Quantity of semi-volatile chemicals released during coating operations

CAS	Chemical	Reported as		Conc	COC Used		PM Emissions		Cure	Area	Cure Emissions		Total Emissions	
		AB2588 ID	Chemical	%	lb/yr	lb/hr	lb/yr	lb/hr	hrs	ft2	lb/yr	lb/hr	lb/yr	lb/hr
24801-88-5	3-Isocyanatopropyltriethoxysilane	1125	Isocyanates	0.259	1.51	0.0315	1.6E-05	3.3E-07	5	40080	1.2E-03	2.5E-05	1.2E-03	2.5E-05
CAS-0099	Isocyanate Terminated Prepolymer	1219	Diisocyanates	47.170	2571.99	57.1554	2.7E-02	6.0E-04	2	450900	1.7E-10	3.9E-12	2.7E-02	6.0E-04
CAS-0999	Isocyanate terminated polytetramethylene glycol prepolymer	1219	Diisocyanates	29.126	1604.18	29.1670	1.7E-02	3.1E-04	2	551100	1.7E-10	3.2E-12	1.7E-02	3.1E-04
26426-91-5	1,6-diisocyanatohexane; 2,4-diisocyanato-1-methylbenzene	1219	Diisocyanates	7.822	660.33	22.0111	6.9E-03	2.3E-04	24	93240	1.7E-10	5.8E-12	6.9E-03	2.3E-04
26426-91-5	1,6-diisocyanatohexane; 2,4-diisocyanato-1-methylbenzene	1219	Diisocyanates	7.822	1320.67	22.0111	1.4E-02	2.3E-04	24	186480	1.7E-10	2.9E-12	1.4E-02	2.3E-04
9016-87-9	POLYMER, DIPHENYLMETHANE DIISOCYANATE	1219	Diisocyanates	6.372	867.56	6.5725	9.1E-03	6.9E-05	5	632016	1.8E-09	1.4E-11	9.1E-03	6.9E-05
9016-87-9	POLYMER, DIPHENYLMETHANE DIISOCYANATE	1219	Diisocyanates	6.372	197.17	0.6846	2.1E-03	7.2E-06	5	143640	4.1E-10	1.4E-12	2.1E-03	7.2E-06
5873-54-1	DIPHENYLMETHANE-2,4-DIISOCYANATE ISOCYANIC ACID	1219	Diisocyanates	0.637	86.76	0.6572	9.1E-04	6.9E-06	5	632016	1.8E-08	1.4E-10	9.1E-04	6.9E-06
2536-05-2	2,2-DIPHENYLMETHANE DIISOCYANATE	1219	Diisocyanates	0.127	17.35	0.1314	1.8E-04	1.4E-06	5	632016	3.6E-09	2.7E-11	1.8E-04	1.4E-06
5873-54-1	DIPHENYLMETHANE-2,4-DIISOCYANATE ISOCYANIC ACID	1219	Diisocyanates	0.637	19.72	0.0685	2.1E-04	7.2E-07	5	143640	4.1E-09	1.4E-11	2.1E-04	7.2E-07
2536-05-2	DIISOCYANATE	1219	Diisocyanates	0.127	3.94	0.0137	4.1E-05	1.4E-07	5	143640	8.1E-10	2.8E-12	4.1E-05	1.4E-07
28182-81-2	POLYMER OF HDI	1221	Polymeric (Oligo) HDI	23.271	136.09	2.8353	1.4E-03	3.0E-05	5	40080	1.7E-10	3.6E-12	1.4E-03	3.0E-05
28182-81-2	POLYMER OF HDI	1221	Polymeric (Oligo) HDI	23.135	53.75	2.2395	5.6E-04	2.4E-05	6	21360	1.7E-10	7.3E-12	5.6E-04	2.4E-05
26447-40-5	DIPHENYLMETHANE DIISOCYANATE (MDI)	101688	Methylene diphenyl diisocyanate {MDI}	0.586	79.82	0.6047	8.4E-04	6.3E-06	5	632016	1.6E-08	1.2E-10	8.4E-04	6.3E-06
26447-40-5	DIPHENYLMETHANE DIISOCYANATE (MDI)	101688	Methylene diphenyl diisocyanate {MDI}	0.586	18.14	0.0630	1.9E-04	6.6E-07	5	143640	3.7E-09	1.3E-11	1.9E-04	6.6E-07
101-68-8	METHYLENEBIS (PHENYLISO CYANATE) (MBI)	101688	Methylene diphenyl diisocyanate {MDI}	5.607	763.46	5.7838	8.0E-03	6.1E-05	5	632016	1.6E-07	1.2E-09	8.0E-03	6.1E-05
101-68-8	METHYLENEBIS (PHENYLISO CYANATE) (MBI)	101688	Methylene diphenyl diisocyanate {MDI}	5.607	173.51	0.6025	1.8E-03	6.3E-06	5	143640	3.6E-08	1.2E-10	1.8E-03	6.3E-06
584-84-9	TOLUENE DIISOCYANATE - 2,4	584849	Toluene-2,4-diisocyanate	0.052	4.40	0.1467	4.6E-05	1.5E-06	24	93240	1.1E-12	3.8E-14	4.6E-05	1.5E-06
584-84-9	TOLUENE DIISOCYANATE - 2,4	584849	Toluene-2,4-diisocyanate	0.052	8.80	0.1467	9.2E-05	1.5E-06	24	186480	2.3E-12	3.8E-14	9.2E-05	1.5E-06
822-06-0	HEXAMETHYLENE DIISOCYANATE -	822060	Hexamethylene-1,6-diisocyanate	0.308	0.72	0.0299	7.5E-06	3.1E-07	6	21360	1.7E-03	7.0E-05	1.7E-03	7.0E-05
822-06-0	HEXAMETHYLENE DIISOCYANATE -	822060	Hexamethylene-1,6-diisocyanate	0.259	1.51	0.0315	1.6E-05	3.3E-07	5	40080	2.6E-03	5.5E-05	2.7E-03	5.6E-05
822-06-0	HEXAMETHYLENE DIISOCYANATE -	822060	Hexamethylene-1,6-diisocyanate	0.052	4.40	0.1467	4.6E-05	1.5E-06	24	93240	1.2E-03	4.0E-05	1.2E-03	4.1E-05
822-06-0	HEXAMETHYLENE DIISOCYANATE -	822060	Hexamethylene-1,6-diisocyanate	0.052	8.80	0.1467	9.2E-05	1.5E-06	24	186480	2.4E-03	4.0E-05	2.5E-03	4.1E-05

Table 11: Quantity of semi-volatile chemicals emitted during coating operations

AB2588 ID	Chemical	Total Emissions		Capture	RC Emissions		COC to RTO		Control	RTO Emissions	
		lb/yr	lb/hr		lb/yr	lb/hr	lb/yr	lb/hr		lb/yr	lb/hr
1125	Isocyanates	0.00121	0.0000252	0.96	0.000048	0.000001	0.00116	0.0000242	0.98	0.0000232	0.0000005
1219	Diisocyanates	0.07717	0.0014540	0.96	0.003087	0.000058	0.07408	0.0013958	0.98	0.0014817	0.0000279
1221	Polymeric (Oligo) HDI	0.00199	0.0000533	0.96	0.000080	0.000002	0.00191	0.0000512	0.98	0.0000383	0.0000010
101688	Methylene diphenyl diisocyanate {MDI}	0.01087	0.0000741	0.96	0.000435	0.000003	0.01043	0.0000711	0.98	0.0002086	0.0000014
584849	Toluene-2,4-diisocyanate	0.00014	0.0000031	0.96	0.000006	0.000000	0.00013	0.0000030	0.98	0.0000027	0.0000001
822060	Hexamethylene-1,6-diisocyanate	0.00807	0.0002084	0.96	0.000323	0.000008	0.00775	0.0002001	0.98	0.0001549	0.0000040

Table 12: Natural gas consumption in the Rotary Concentrator and Regenerative Thermal Oxidizer

Unit	Capacity mmBtu/hr	Opeating Hours	Heat Input			
			mmBtu/yr	mmBtu/hr	mmscf/yr	mmscf/hr
RC Desorption Heater	1.98	8760	17344.8	1.98	17.3448	0.00198
RTO Natural Gas Injection	1	8760	8760	1	8.76	0.001

Table 13: Emissions from natural gas combustion in the rotary concentrator and regenerative thermal oxidizer

Pollutant	A2588	Emission factor		Source	RC		RTO	
	ID	lb/mmscf	lb/mmBtu		lb/year	lb/hr	lb/year	lb/hr
NOx	42603	36.3587	3.64E-02	30 ppm NOx at 3% O2	630.635	7.20E-02	318.503	3.64E-02
SOx	42401	0.6000	6.00E-04	AVAQMD Default	10.407	1.19E-03	5.256	6.00E-04
CO	42101	15.8081	1.58E-02	20 ppm CO at 3% O2	274.189	3.13E-02	138.479	1.58E-02
PM	11101	7.6000	7.60E-03	AVAQMD Default	131.820	1.50E-02	66.576	7.60E-03
PM-Filterable	11105	1.9000	1.90E-03	AVAQMD Default	32.955	3.76E-03	16.644	1.90E-03
PM10	85101	7.6000	7.60E-03	AVAQMD Default	131.820	1.50E-02	66.576	7.60E-03
PM10-Filterable	85105	1.9000	1.90E-03	AVAQMD Default	32.955	3.76E-03	16.644	1.90E-03
PM2.5	88101	7.6000	7.60E-03	AVAQMD Default	131.820	1.50E-02	66.576	7.60E-03
PM2.5-Filterable	88105	1.9000	1.90E-03	AVAQMD Default	32.955	3.76E-03	16.644	1.90E-03
VOC	43101	5.5000	5.50E-03	AVAQMD Default	95.396	1.09E-02	48.180	5.50E-03
Lead	12128	0.0005	5.00E-07	AVAQMD Default	0.009	9.90E-07	0.004	5.00E-07
Ammonia-Crit	42604	3.2000	3.20E-03	SCAQMD Default	55.503	6.34E-03	28.032	3.20E-03
Acenaphthene	83329	1.80E-06	1.80E-09	AVAQMD Default	0.000095	3.56E-09	0.000016	1.80E-09
Acenaphthylene	208968	1.80E-06	1.80E-09	AVAQMD Default	0.000095	3.56E-09	0.000016	1.80E-09
Acetaldehyde	75070	4.30E-03	4.30E-06	AVAQMD Default	0.226008	8.51E-06	0.037668	4.30E-06
Acrolein	107028	2.70E-03	2.70E-06	AVAQMD Default	0.141912	5.35E-06	0.023652	2.70E-06
Ammonia	7664417	3.20E+00	3.20E-03	AVAQMD Default	168.19200	6.34E-03	28.032000	3.20E-03
Anthracene	120127	2.40E-06	2.40E-09	AVAQMD Default	0.000126	4.75E-09	0.000021	2.40E-09
Arsenic	7440382	2.00E-04	2.00E-07	AVAQMD Default	0.010512	3.96E-07	0.001752	2.00E-07
Barium	7440393	4.40E-03	4.40E-06	AVAQMD Default	0.231264	8.71E-06	0.038544	4.40E-06
Benzaldehyde	100527	1.64E-02	1.64E-05	AVAQMD Default	0.861984	3.25E-05	0.143664	1.64E-05
Benzene	71432	8.00E-03	8.00E-06	AVAQMD Default	0.420480	1.58E-05	0.070080	8.00E-06
Benzo(a)anthracene	56553	1.80E-06	1.80E-09	AVAQMD Default	0.000095	3.56E-09	0.000016	1.80E-09
Benzo(a)pyrene	50328	1.60E-06	1.60E-09	AVAQMD Default	0.000084	3.17E-09	0.000014	1.60E-09
Benzo(b)fluoranthene	205992	1.80E-06	1.80E-09	AVAQMD Default	0.000095	3.56E-09	0.000016	1.80E-09
Benzo(g,h,I)perylene	191242	1.60E-06	1.60E-09	AVAQMD Default	0.000084	3.17E-09	0.000014	1.60E-09
Benzo(k)fluoranthene	205823	1.80E-06	1.80E-09	AVAQMD Default	0.000095	3.56E-09	0.000016	1.80E-09
Beryllium	7440417	1.20E-05	1.20E-08	AVAQMD Default	0.000631	2.38E-08	0.000105	1.20E-08
Cadmium	7440439	1.10E-03	1.10E-06	AVAQMD Default	0.057816	2.18E-06	0.009636	1.10E-06
Chromium (total)	7440473	1.40E-03	1.40E-06	AVAQMD Default	0.073584	2.77E-06	0.012264	1.40E-06
Chrysene	218019	1.80E-06	1.80E-09	AVAQMD Default	0.000095	3.56E-09	0.000016	1.80E-09
Cobalt	7440484	8.40E-05	8.40E-08	AVAQMD Default	0.004415	1.66E-07	0.000736	8.40E-08
Copper	7440508	8.50E-04	8.50E-07	AVAQMD Default	0.044676	1.68E-06	0.007446	8.50E-07
Dibenzo(a,h)anthracene	53703	1.60E-06	1.60E-09	AVAQMD Default	0.000084	3.17E-09	0.000014	1.60E-09
Dichlorobenzene	25321226	1.20E-03	1.20E-06	AVAQMD Default	0.063072	2.38E-06	0.010512	1.20E-06
7,12-Dimethylbenz(a)anthracene	57976	1.60E-05	1.60E-08	AVAQMD Default	0.000841	3.17E-08	0.000140	1.60E-08
Ethyl Benzene	100414	9.50E-03	9.50E-06	AVAQMD Default	0.499320	1.88E-05	0.083220	9.50E-06
Fluoranthene	206440	3.00E-06	3.00E-09	AVAQMD Default	0.000158	5.94E-09	0.000026	3.00E-09
Fluorene	86737	2.80E-06	2.80E-09	AVAQMD Default	0.000147	5.54E-09	0.000025	2.80E-09
Formaldehyde	50000	1.70E-02	1.70E-05	AVAQMD Default	0.893520	3.37E-05	0.148920	1.70E-05
Hexane	110543	6.30E-03	6.30E-06	AVAQMD Default	0.331128	1.25E-05	0.055188	6.30E-06
Indeno(1,2,3-cd)pyrene	193395	1.80E-06	1.80E-09	AVAQMD Default	0.000095	3.56E-09	0.000016	1.80E-09
Lead	7439921	5.00E-04	5.00E-07	AVAQMD Default	0.026280	9.90E-07	0.004380	5.00E-07
Manganese	7439965	3.80E-04	3.80E-07	AVAQMD Default	0.019973	7.52E-07	0.003329	3.80E-07
Mercury	7439976	2.60E-04	2.60E-07	AVAQMD Default	0.013666	5.15E-07	0.002278	2.60E-07
3-methylchloranthrene	56495	1.80E-06	1.80E-09	AVAQMD Default	0.000095	3.56E-09	0.000016	1.80E-09
2-Methylnaphthalene	91576	2.40E-05	2.40E-08	AVAQMD Default	0.001261	4.75E-08	0.000210	2.40E-08
Molybdenum	7439987	1.10E-03	1.10E-06	AVAQMD Default	0.057816	2.18E-06	0.009636	1.10E-06
Naphthalene	91203	3.00E-04	3.00E-07	AVAQMD Default	0.015768	5.94E-07	0.002628	3.00E-07
Nickel	7440020	2.10E-03	2.10E-06	AVAQMD Default	0.110376	4.16E-06	0.018396	2.10E-06
PAH's	1150	4.00E-04	4.00E-07	AVAQMD Default	0.021024	7.92E-07	0.003504	4.00E-07
Phenanathrene	85018	1.70E-05	1.70E-08	AVAQMD Default	0.000894	3.37E-08	0.000149	1.70E-08
Pyrene	129000	5.00E-06	5.00E-09	AVAQMD Default	0.000263	9.90E-09	0.000044	5.00E-09
Selenium	7782492	2.40E-05	2.40E-08	AVAQMD Default	0.001261	4.75E-08	0.000210	2.40E-08
Toluene	108883	3.66E-02	3.66E-05	AVAQMD Default	1.923696	7.25E-05	0.320616	3.66E-05
Vanadium	7440622	2.30E-03	2.30E-06	AVAQMD Default	0.120888	4.55E-06	0.020148	2.30E-06
Xylenes	1330207	2.72E-02	2.72E-05	AVAQMD Default	1.429632	5.39E-05	0.238272	2.72E-05
Zinc	7440666	2.90E-02	2.90E-05	AVAQMD Default	1.524240	5.74E-05	0.254040	2.90E-05

Table 14: Boilers that will be installed as part of the Phase III expansion

Unit	Device ID	Capacity mmBtu/hr	Fuel Use	
			mmBtu	mmBtu/hr
Boiler 1	999003	6.0	52560	6
Boiler 2	999004	6.0	52560	6
Boiler 3	999005	6.0	52560	6
Boiler 4	999006	6.0	52560	6
Boiler 5	999007	6.0	52560	6
Boiler 6	999008	6.0	52560	6
Boiler 7	999009	6.0	52560	6
Boiler 8	999010	6.0	52560	6

Table 15: Annual emissions from boilers installed as part of the Phase III expansion

Pollutant	Pol ID	EF lb/mmscf	Source	Emissions (lb/year)							
				Boiler 1	Boiler 2	Boiler 3	Boiler 4	Boiler 5	Boiler 6	Boiler 7	Boiler 8
NOx	42603	8.48E-06	7 ppm NOx at 3% O2	446	446	446	446	446	446	446	446
SOx	42401	1.69E-06	1 ppm SOx at 3% O2	89	89	89	89	89	89	89	89
CO	42101	1.58E-05	20 ppm CO at 3% O2	831	831	831	831	831	831	831	831
PM	11101	7.60E-03	AVAQMD Default	399456	399456	399456	399456	399456	399456	399456	399456
PM-Filterable	11105	1.90E-03	AVAQMD Default	99864	99864	99864	99864	99864	99864	99864	99864
PM10	85101	7.60E-03	AVAQMD Default	399456	399456	399456	399456	399456	399456	399456	399456
PM10-Filterable	85105	1.90E-03	AVAQMD Default	99864	99864	99864	99864	99864	99864	99864	99864
PM2.5	88101	7.60E-03	AVAQMD Default	399456	399456	399456	399456	399456	399456	399456	399456
PM2.5-Filterable	88105	1.90E-03	AVAQMD Default	99864	99864	99864	99864	99864	99864	99864	99864
VOC	43101	1.69E-06	4 ppm VOC at 3% O2	89	89	89	89	89	89	89	89
Lead	12128	5.00E-04	AVAQMD Default	0.0263	0.0263	0.0263	0.0263	0.0263	0.0263	0.0263	0.0263
Ammonia-Crit	42604	3.20E+00	SCAQMD Default	168.19	168.19	168.19	168.19	168.19	168.19	168.19	168.19
Acenaphthene	83329	1.80E-06	AVAQMD Default	0.0001	0.0001	0.0001	0.0001	0.0001	0.0001	0.0001	0.0001
Acenaphthylene	208968	1.80E-06	AVAQMD Default	0.0001	0.0001	0.0001	0.0001	0.0001	0.0001	0.0001	0.0001
Acetaldehyde	75070	4.30E-03	AVAQMD Default	0.2260	0.2260	0.2260	0.2260	0.2260	0.2260	0.2260	0.2260
Acrolein	107028	2.70E-03	AVAQMD Default	0.1419	0.1419	0.1419	0.1419	0.1419	0.1419	0.1419	0.1419
Ammonia	42604	3.20E+00	AVAQMD Default	168.19	168.19	168.19	168.19	168.19	168.19	168.19	168.19
Anthracene	120127	2.40E-06	AVAQMD Default	0.0001	0.0001	0.0001	0.0001	0.0001	0.0001	0.0001	0.0001
Arsenic	7440382	2.00E-04	AVAQMD Default	0.0105	0.0105	0.0105	0.0105	0.0105	0.0105	0.0105	0.0105
Barium	7440393	4.40E-03	AVAQMD Default	0.2313	0.2313	0.2313	0.2313	0.2313	0.2313	0.2313	0.2313
Benzaldehyde	100527	1.64E-02	AVAQMD Default	0.8620	0.8620	0.8620	0.8620	0.8620	0.8620	0.8620	0.8620
Benzene	71432	8.00E-03	AVAQMD Default	0.4205	0.4205	0.4205	0.4205	0.4205	0.4205	0.4205	0.4205
Benzo(a)anthracene	56553	1.80E-06	AVAQMD Default	0.0001	0.0001	0.0001	0.0001	0.0001	0.0001	0.0001	0.0001
Benzo(a)pyrene	50328	1.60E-06	AVAQMD Default	0.0001	0.0001	0.0001	0.0001	0.0001	0.0001	0.0001	0.0001
Benzo(b)fluoranthene	205992	1.80E-06	AVAQMD Default	0.0001	0.0001	0.0001	0.0001	0.0001	0.0001	0.0001	0.0001
Benzo(g,h,I)perylene	191242	1.60E-06	AVAQMD Default	0.0001	0.0001	0.0001	0.0001	0.0001	0.0001	0.0001	0.0001
Benzo(k)fluoranthene	205823	1.80E-06	AVAQMD Default	0.0001	0.0001	0.0001	0.0001	0.0001	0.0001	0.0001	0.0001
Beryllium	7440417	1.20E-05	AVAQMD Default	0.0006	0.0006	0.0006	0.0006	0.0006	0.0006	0.0006	0.0006
Butane	106978	2.10E+00	AVAQMD Default	110.38	110.38	110.38	110.38	110.38	110.38	110.38	110.38
Cadmium	7440439	1.10E-03	AVAQMD Default	0.0578	0.0578	0.0578	0.0578	0.0578	0.0578	0.0578	0.0578
Chromium (total)	7440473	1.40E-03	AVAQMD Default	0.0736	0.0736	0.0736	0.0736	0.0736	0.0736	0.0736	0.0736
Chrysene	218019	1.80E-06	AVAQMD Default	0.0001	0.0001	0.0001	0.0001	0.0001	0.0001	0.0001	0.0001
Cobalt	7440484	8.40E-05	AVAQMD Default	0.0044	0.0044	0.0044	0.0044	0.0044	0.0044	0.0044	0.0044
Copper	7440508	8.50E-04	AVAQMD Default	0.0447	0.0447	0.0447	0.0447	0.0447	0.0447	0.0447	0.0447
Dibenzo(a,h)anthracene	53703	1.60E-06	AVAQMD Default	0.0001	0.0001	0.0001	0.0001	0.0001	0.0001	0.0001	0.0001
Dichlorobenzene	25321226	1.20E-03	AVAQMD Default	0.0631	0.0631	0.0631	0.0631	0.0631	0.0631	0.0631	0.0631
7,12-Dimethylbenz(a)anthracene	57976	1.60E-05	AVAQMD Default	0.0008	0.0008	0.0008	0.0008	0.0008	0.0008	0.0008	0.0008
Ethyl Benzene	100414	9.50E-03	AVAQMD Default	0.4993	0.4993	0.4993	0.4993	0.4993	0.4993	0.4993	0.4993
Fluoranthene	206440	3.00E-06	AVAQMD Default	0.0002	0.0002	0.0002	0.0002	0.0002	0.0002	0.0002	0.0002
Fluorene	86737	2.80E-06	AVAQMD Default	0.0001	0.0001	0.0001	0.0001	0.0001	0.0001	0.0001	0.0001
Formaldehyde	50000	1.70E-02	AVAQMD Default	0.8935	0.8935	0.8935	0.8935	0.8935	0.8935	0.8935	0.8935
Hexane	110543	6.30E-03	AVAQMD Default	0.3311	0.3311	0.3311	0.3311	0.3311	0.3311	0.3311	0.3311
Indeno(1,2,3-cd)pyrene	193395	1.80E-06	AVAQMD Default	0.0001	0.0001	0.0001	0.0001	0.0001	0.0001	0.0001	0.0001
Lead	7439921	5.00E-04	AVAQMD Default	0.0263	0.0263	0.0263	0.0263	0.0263	0.0263	0.0263	0.0263
Manganese	7439965	3.80E-04	AVAQMD Default	0.0200	0.0200	0.0200	0.0200	0.0200	0.0200	0.0200	0.0200
Mercury	7439976	2.60E-04	AVAQMD Default	0.0137	0.0137	0.0137	0.0137	0.0137	0.0137	0.0137	0.0137
3-methylchloranthrene	56495	1.80E-06	AVAQMD Default	0.0001	0.0001	0.0001	0.0001	0.0001	0.0001	0.0001	0.0001
2-Methylnaphthalene	91576	2.40E-05	AVAQMD Default	0.0013	0.0013	0.0013	0.0013	0.0013	0.0013	0.0013	0.0013
Molybdenum	7439987	1.10E-03	AVAQMD Default	0.0578	0.0578	0.0578	0.0578	0.0578	0.0578	0.0578	0.0578
Naphthalene	91203	3.00E-04	AVAQMD Default	0.0158	0.0158	0.0158	0.0158	0.0158	0.0158	0.0158	0.0158
Nickel	7440020	2.10E-03	AVAQMD Default	0.1104	0.1104	0.1104	0.1104	0.1104	0.1104	0.1104	0.1104
PAH's	1150	4.00E-04	AVAQMD Default	0.0210	0.0210	0.0210	0.0210	0.0210	0.0210	0.0210	0.0210
Pentane	109660	2.60E+00	AVAQMD Default	136.66	136.66	136.66	136.66	136.66	136.66	136.66	136.66
Phenanathrene	85018	1.70E-05	AVAQMD Default	0.0009	0.0009	0.0009	0.0009	0.0009	0.0009	0.0009	0.0009
Pyrene	129000	5.00E-06	AVAQMD Default	0.0003	0.0003	0.0003	0.0003	0.0003	0.0003	0.0003	0.0003
Selenium	7782492	2.40E-05	AVAQMD Default	0.0013	0.0013	0.0013	0.0013	0.0013	0.0013	0.0013	0.0013
Toluene	108883	3.66E-02	AVAQMD Default	1.9237	1.9237	1.9237	1.9237	1.9237	1.9237	1.9237	1.9237
Vanadium	7440622	2.30E-03	AVAQMD Default	0.1209	0.1209	0.1209	0.1209	0.1209	0.1209	0.1209	0.1209
Xylenes	1330207	2.72E-02	AVAQMD Default	1.4296	1.4296	1.4296	1.4296	1.4296	1.4296	1.4296	1.4296
Zinc	7440666	2.90E-02	AVAQMD Default	1.5242	1.5242	1.5242	1.5242	1.5242	1.5242	1.5242	1.5242

Table 16: Hourly emissions from boilers installed as part of the Phase III expansion

Pollutant	Pol ID	EF lb/mmscf	Source	Emissions (lb/hr)							
				Boiler 1	Boiler 2	Boiler 3	Boiler 4	Boiler 5	Boiler 6	Boiler 7	Boiler 8
NOx	42603	8.48E-06	7 ppm NOx at 3% O2	0.0509	0.0509	0.0509	0.0509	0.0509	0.0509	0.0509	0.0509
SOx	42401	1.69E-06	1 ppm SOx at 3% O2	0.0101	0.0101	0.0101	0.0101	0.0101	0.0101	0.0101	0.0101
CO	42101	1.58E-05	20 ppm CO at 3% O2	0.0948	0.0948	0.0948	0.0948	0.0948	0.0948	0.0948	0.0948
PM	11101	7.60E-03	AVAQMD Default	45.600	45.600	45.600	45.600	45.600	45.600	45.600	45.600
PM-Filterable	11105	1.90E-03	AVAQMD Default	11.400	11.400	11.400	11.400	11.400	11.400	11.400	11.400
PM10	85101	7.60E-03	AVAQMD Default	45.600	45.600	45.600	45.600	45.600	45.600	45.600	45.600
PM10-Filterable	85105	1.90E-03	AVAQMD Default	11.400	11.400	11.400	11.400	11.400	11.400	11.400	11.400
PM2.5	88101	7.60E-03	AVAQMD Default	45.600	45.600	45.600	45.600	45.600	45.600	45.600	45.600
PM2.5-Filterable	88105	1.90E-03	AVAQMD Default	11.400	11.400	11.400	11.400	11.400	11.400	11.400	11.400
VOC	43101	1.69E-06	4 ppm VOC at 3% O2	0.010	0.010	0.010	0.010	0.010	0.010	0.010	0.010
Lead	12128	5.00E-04	AVAQMD Default	3.00E-06	3.00E-06	3.00E-06	3.00E-06	3.00E-06	3.00E-06	3.00E-06	3.00E-06
Ammonia-Crit	42604	3.20E+00	SCAQMD Default	1.92E-02	1.92E-02	1.92E-02	1.92E-02	1.92E-02	1.92E-02	1.92E-02	1.92E-02
Acenaphthene	83329	1.80E-06	AVAQMD Default	1.08E-08	1.08E-08	1.08E-08	1.08E-08	1.08E-08	1.08E-08	1.08E-08	1.08E-08
Acenaphthylene	208968	1.80E-06	AVAQMD Default	1.08E-08	1.08E-08	1.08E-08	1.08E-08	1.08E-08	1.08E-08	1.08E-08	1.08E-08
Acetaldehyde	75070	4.30E-03	AVAQMD Default	2.58E-05	2.58E-05	2.58E-05	2.58E-05	2.58E-05	2.58E-05	2.58E-05	2.58E-05
Acrolein	107028	2.70E-03	AVAQMD Default	1.62E-05	1.62E-05	1.62E-05	1.62E-05	1.62E-05	1.62E-05	1.62E-05	1.62E-05
Ammonia	42604	3.20E+00	AVAQMD Default	1.92E-02	1.92E-02	1.92E-02	1.92E-02	1.92E-02	1.92E-02	1.92E-02	1.92E-02
Anthracene	120127	2.40E-06	AVAQMD Default	1.44E-08	1.44E-08	1.44E-08	1.44E-08	1.44E-08	1.44E-08	1.44E-08	1.44E-08
Arsenic	7440382	2.00E-04	AVAQMD Default	1.20E-06	1.20E-06	1.20E-06	1.20E-06	1.20E-06	1.20E-06	1.20E-06	1.20E-06
Barium	7440393	4.40E-03	AVAQMD Default	2.64E-05	2.64E-05	2.64E-05	2.64E-05	2.64E-05	2.64E-05	2.64E-05	2.64E-05
Benzaldehyde	100527	1.64E-02	AVAQMD Default	9.84E-05	9.84E-05	9.84E-05	9.84E-05	9.84E-05	9.84E-05	9.84E-05	9.84E-05
Benzene	71432	8.00E-03	AVAQMD Default	4.80E-05	4.80E-05	4.80E-05	4.80E-05	4.80E-05	4.80E-05	4.80E-05	4.80E-05
Benzo(a)anthracene	56553	1.80E-06	AVAQMD Default	1.08E-08	1.08E-08	1.08E-08	1.08E-08	1.08E-08	1.08E-08	1.08E-08	1.08E-08
Benzo(a)pyrene	50328	1.60E-06	AVAQMD Default	9.60E-09	9.60E-09	9.60E-09	9.60E-09	9.60E-09	9.60E-09	9.60E-09	9.60E-09
Benzo(b)fluoranthene	205992	1.80E-06	AVAQMD Default	1.08E-08	1.08E-08	1.08E-08	1.08E-08	1.08E-08	1.08E-08	1.08E-08	1.08E-08
Benzo(g,h,I)perylene	191242	1.60E-06	AVAQMD Default	9.60E-09	9.60E-09	9.60E-09	9.60E-09	9.60E-09	9.60E-09	9.60E-09	9.60E-09
Benzo(k)fluoranthene	205823	1.80E-06	AVAQMD Default	1.08E-08	1.08E-08	1.08E-08	1.08E-08	1.08E-08	1.08E-08	1.08E-08	1.08E-08
Beryllium	7440417	1.20E-05	AVAQMD Default	7.20E-08	7.20E-08	7.20E-08	7.20E-08	7.20E-08	7.20E-08	7.20E-08	7.20E-08
Butane	106978	2.10E+00	AVAQMD Default	1.26E-02	1.26E-02	1.26E-02	1.26E-02	1.26E-02	1.26E-02	1.26E-02	1.26E-02
Cadmium	7440439	1.10E-03	AVAQMD Default	6.60E-06	6.60E-06	6.60E-06	6.60E-06	6.60E-06	6.60E-06	6.60E-06	6.60E-06
Chromium (total)	7440473	1.40E-03	AVAQMD Default	8.40E-06	8.40E-06	8.40E-06	8.40E-06	8.40E-06	8.40E-06	8.40E-06	8.40E-06
Chrysene	218019	1.80E-06	AVAQMD Default	1.08E-08	1.08E-08	1.08E-08	1.08E-08	1.08E-08	1.08E-08	1.08E-08	1.08E-08
Cobalt	7440484	8.40E-05	AVAQMD Default	5.04E-07	5.04E-07	5.04E-07	5.04E-07	5.04E-07	5.04E-07	5.04E-07	5.04E-07
Copper	7440508	8.50E-04	AVAQMD Default	5.10E-06	5.10E-06	5.10E-06	5.10E-06	5.10E-06	5.10E-06	5.10E-06	5.10E-06
Dibenzo(a,h)anthracene	53703	1.60E-06	AVAQMD Default	9.60E-09	9.60E-09	9.60E-09	9.60E-09	9.60E-09	9.60E-09	9.60E-09	9.60E-09
Dichlorobenzene	25321226	1.20E-03	AVAQMD Default	7.20E-06	7.20E-06	7.20E-06	7.20E-06	7.20E-06	7.20E-06	7.20E-06	7.20E-06
7,12-Dimethylbenz(a)anthracene	57976	1.60E-05	AVAQMD Default	9.60E-08	9.60E-08	9.60E-08	9.60E-08	9.60E-08	9.60E-08	9.60E-08	9.60E-08
Ethyl Benzene	100414	9.50E-03	AVAQMD Default	5.70E-05	5.70E-05	5.70E-05	5.70E-05	5.70E-05	5.70E-05	5.70E-05	5.70E-05
Fluoranthene	206440	3.00E-06	AVAQMD Default	1.80E-08	1.80E-08	1.80E-08	1.80E-08	1.80E-08	1.80E-08	1.80E-08	1.80E-08
Fluorene	86737	2.80E-06	AVAQMD Default	1.68E-08	1.68E-08	1.68E-08	1.68E-08	1.68E-08	1.68E-08	1.68E-08	1.68E-08
Formaldehyde	50000	1.70E-02	AVAQMD Default	1.02E-04	1.02E-04	1.02E-04	1.02E-04	1.02E-04	1.02E-04	1.02E-04	1.02E-04
Hexane	110543	6.30E-03	AVAQMD Default	3.78E-05	3.78E-05	3.78E-05	3.78E-05	3.78E-05	3.78E-05	3.78E-05	3.78E-05
Indeno(1,2,3-cd)pyrene	193395	1.80E-06	AVAQMD Default	1.08E-08	1.08E-08	1.08E-08	1.08E-08	1.08E-08	1.08E-08	1.08E-08	1.08E-08
Lead	7439921	5.00E-04	AVAQMD Default	3.00E-06	3.00E-06	3.00E-06	3.00E-06	3.00E-06	3.00E-06	3.00E-06	3.00E-06
Manganese	7439965	3.80E-04	AVAQMD Default	2.28E-06	2.28E-06	2.28E-06	2.28E-06	2.28E-06	2.28E-06	2.28E-06	2.28E-06
Mercury	7439976	2.60E-04	AVAQMD Default	1.56E-06	1.56E-06	1.56E-06	1.56E-06	1.56E-06	1.56E-06	1.56E-06	1.56E-06
3-methylchloranthrene	56495	1.80E-06	AVAQMD Default	1.08E-08	1.08E-08	1.08E-08	1.08E-08	1.08E-08	1.08E-08	1.08E-08	1.08E-08
2-Methylnaphthalene	91576	2.40E-05	AVAQMD Default	1.44E-07	1.44E-07	1.44E-07	1.44E-07	1.44E-07	1.44E-07	1.44E-07	1.44E-07
Molybdenum	7439987	1.10E-03	AVAQMD Default	6.60E-06	6.60E-06	6.60E-06	6.60E-06	6.60E-06	6.60E-06	6.60E-06	6.60E-06
Naphthalene	91203	3.00E-04	AVAQMD Default	1.80E-06	1.80E-06	1.80E-06	1.80E-06	1.80E-06	1.80E-06	1.80E-06	1.80E-06
Nickel	7440020	2.10E-03	AVAQMD Default	1.26E-05	1.26E-05	1.26E-05	1.26E-05	1.26E-05	1.26E-05	1.26E-05	1.26E-05
PAH's	1150	4.00E-04	AVAQMD Default	2.40E-06	2.40E-06	2.40E-06	2.40E-06	2.40E-06	2.40E-06	2.40E-06	2.40E-06
Pentane	109660	2.60E+00	AVAQMD Default	1.56E-02	1.56E-02	1.56E-02	1.56E-02	1.56E-02	1.56E-02	1.56E-02	1.56E-02
Phenanathrene	85018	1.70E-05	AVAQMD Default	1.02E-07	1.02E-07	1.02E-07	1.02E-07	1.02E-07	1.02E-07	1.02E-07	1.02E-07
Pyrene	129000	5.00E-06	AVAQMD Default	3.00E-08	3.00E-08	3.00E-08	3.00E-08	3.00E-08	3.00E-08	3.00E-08	3.00E-08
Selenium	7782492	2.40E-05	AVAQMD Default	1.44E-07	1.44E-07	1.44E-07	1.44E-07	1.44E-07	1.44E-07	1.44E-07	1.44E-07
Toluene	108883	3.66E-02	AVAQMD Default	2.20E-04	2.20E-04	2.20E-04	2.20E-04	2.20E-04	2.20E-04	2.20E-04	2.20E-04
Vanadium	7440622	2.30E-03	AVAQMD Default	1.38E-05	1.38E-05	1.38E-05	1.38E-05	1.38E-05	1.38E-05	1.38E-05	1.38E-05
Xylenes	1330207	2.72E-02	AVAQMD Default	1.63E-04	1.63E-04	1.63E-04	1.63E-04	1.63E-04	1.63E-04	1.63E-04	1.63E-04
Zinc	7440666	2.90E-02	AVAQMD Default	1.74E-04	1.74E-04	1.74E-04	1.74E-04	1.74E-04	1.74E-04	1.74E-04	1.74E-04

Table 17: Emergency IC engines installed as part of the current permit action

Equipment	Device ID	Fuel	Capacity		Op Hour	Fuel Use	HHV	Fuel Use			
			bhp	kwh	hr/yr	scf/hr	BTU/scf	mmscf/yr	mmscf/hr	mgal/yr	mgal/hr
Emergency Generator, B421	999011	Natural Gas	566	422	50	3499	1000	0.1749	0.0035		
Emergency Generator,Sewer Lift Station*	999012	LPG	398	297	50	1146	2500	0.0573	0.0011	1.5654	0.0313
Emergency Generator, B333*	999013	LPG	472	352	50	1407	2500	0.0704	0.0014	1.9221	0.0384

* These enginrs are replacing existing equipment

Table 18: Emissions from the natural gas fired emergency generator to be installed in support of Phase II operations

Engine	Fuel	Capacity bhp	Fuel Rate mmscf/hr	Pollutant	AB2588 ID	Emission Factor		Emissions	
						g/bhp-hr	lb/mmscf	lb/yr	lb/hr
PSI 18.3 CAC	Natural Gas	566	0.003499	NOx	42603	0.030	10.7	1.8700	0.0374
				SOx	42401		0.6	0.1029	0.0021
				CO	42101	0.21	74.8	13.0903	0.2618
				PM	11101		19.4	3.3938	0.0679
				PM-Filterable	11105		9.5	1.6619	0.0332
				PM10	85101		19.4	3.3938	0.0679
				PM10-Filterable	85105		9.5	1.6619	0.0332
				PM2.5	88101		19.4	3.3938	0.0679
				PM2.5-Filterable	88105		9.5	1.6619	0.0332
				VOC	43101	0.01	3.6	0.6233	0.0125
				Lead	12128		0	0.0000	0.0000
				Ammonia-Crit	42604		3.2	0.5598	0.0112
				1,1 - Dichloroethane	75343		1.13E-02	1.98E-03	3.95E-05
				1,1,2 - Trichloroetrhane	79005		1.53E-02	2.68E-03	5.35E-05
				1,1,2,2 - Tetrachloroethane	79345		2.53E-02	4.43E-03	8.85E-05
				1,2 - Dichloropropane	78875		1.30E-02	2.27E-03	4.55E-05
				1,3 - Dichloropropene	542756		1.27E-02	2.22E-03	4.44E-05
				1,3-Butadiene	106990		6.63E-01	1.16E-01	2.32E-03
				Acenaphthene	83329		1.94E-03	3.39E-04	6.79E-06
				Acenaphthylene	208968		1.45E-02	2.54E-03	5.07E-05
				Acetaldehyde	75070		2.79E+00	4.88E-01	9.76E-03
				Acrolein	107028		2.63E+00	4.60E-01	9.20E-03
				Ammonia	7664417		3.20E+00	5.60E-01	1.12E-02
				Benzene	71432		7.39E-02	1.29E-02	2.59E-04
				Benzo(b)fluoranthenen	205992		2.37E-04	4.15E-05	8.29E-07
				Benzo(g,h,l)perylene	191242		1.95E-04	3.41E-05	6.82E-07
				Benzo(k)fluoranthene	207089		1.03E-04	1.80E-05	3.60E-07
				Butyr/Isobutyaldehyde	78842		4.86E-02	8.50E-03	1.70E-04
				Carbon tetrachloride	56235		1.77E-02	3.10E-03	6.19E-05
				Chlorobenzene	108907		1.29E-02	2.26E-03	4.51E-05
				Chloroform	67663		1.37E-02	2.40E-03	4.79E-05
				Chrysene	218019		3.10E-04	5.42E-05	1.08E-06
				Ethyl benzene	100414		2.48E-03	4.34E-04	8.68E-06
				Ethylene dibromide	106934		2.13E-02	3.73E-03	7.45E-05
				Ethylene Dichloride	107062		1.13E-02	1.98E-03	3.95E-05
				Fluoranthene	206440		9.95E-04	1.74E-04	3.48E-06
				Fluorene	86737		6.91E-03	1.21E-03	2.42E-05
				Formaldehyde	50000		2.05E+01	3.59E+00	7.17E-02
				Methylene chloride	74953		4.12E-02	7.21E-03	1.44E-04
				Naphthalene	91203		9.71E-02	1.70E-02	3.40E-04
				PAH *	1150		1.41E-01	2.47E-02	4.93E-04
				Phenanthrene	85018		7.07E-03	1.24E-03	2.47E-05
				Propylene	115071		1.60E+01	2.80E+00	5.60E-02
				Pyrene	129000		1.79E-03	3.13E-04	6.26E-06
				Styrene	100425		1.19E-02	2.08E-03	4.16E-05
				Toluene	108883		5.58E-01	9.76E-02	1.95E-03
				Vinyl chloride	75014		7.18E-03	1.26E-03	2.51E-05
				Xylenes	1330207		1.95E-01	3.41E-02	6.82E-04

Table 19: Emissions from the emergency IC engine replacing an existing engine at the S4 sewer lift station

Engine	Fuel	Capacity bhp	Fuel Rate mgal/hr	Pollutant	AB2588 ID	Emission Factor		Emissions	
						g/bhp-hr	lb/mgal	lb/yr	lb/hr
PSI 18.3 CAC	LPG	398	0.031309	NOx	42603	0.06	1.7	2.6300	0.0526
				SOx	42401		0.4	0.5479	0.0110
				CO	42101	0.2	5.6	8.7665	0.1753
				PM	11101		5.0	7.8272	0.1565
				PM-Filterable	11105		2.5	3.9136	0.0783
				PM10	85101		5.0	7.8272	0.1565
				PM10-Filterable	85105		2.5	3.9136	0.0783
				PM2.5	88101		5.0	7.8272	0.1565
				PM2.5-Filterable	88105		2.5	3.9136	0.0783
				VOC	43101	0.06	1.7	2.6300	0.0526
				Lead	12128		0	0.0000	0.0000
				Ammonia-Crit	42604		0	0.0000	0.0000
				1,1 - Dichloroethane	75343		1.03E-03	1.62E-03	3.24E-05
				1,1,2 - Trichloroetrhane	79005		1.40E-03	2.19E-03	4.38E-05
				1,1,2,2 - Tetrachloroethane	79345		2.31E-03	3.62E-03	7.25E-05
				1,2 - Dichloropropane	78875		1.19E-03	1.86E-03	3.72E-05
				1,3 - Dichloropropene	542756		1.16E-03	1.82E-03	3.64E-05
				1,3-Butadiene	106990		6.07E-02	9.50E-02	1.90E-03
				Acenaphthene	83329		1.78E-04	2.78E-04	5.56E-06
				Acenaphthylene	208968		1.33E-03	2.08E-03	4.15E-05
				Acetaldehyde	75070		2.55E-01	4.00E-01	7.99E-03
				Acrolein	107028		2.41E-01	3.77E-01	7.53E-03
				Benzene	71432		1.75E-01	2.74E-01	5.47E-03
				Benzo(b)fluoranthenen	205992		2.17E-05	3.39E-05	6.79E-07
				Benzo(g,h,l)perylene	191242		1.78E-05	2.79E-05	5.59E-07
				Benzo(k)fluoranthene	207089		9.42E-06	1.48E-05	2.95E-07
				Butyr/Isobutyaldehyde	78842		4.45E-03	6.96E-03	1.39E-04
				Carbon tetrachloride	56235		1.62E-03	2.54E-03	5.07E-05
				Chlorobenzene	108907		1.18E-03	1.85E-03	3.70E-05
				Chloroform	67663		1.25E-03	1.96E-03	3.92E-05
				Chrysene	218019		2.84E-05	4.44E-05	8.88E-07
				Ethyl benzene	100414		2.27E-04	3.55E-04	7.10E-06
				Ethylene dibromide	106934		1.95E-03	3.05E-03	6.10E-05
				Ethylene Dichloride	107062		1.03E-03	1.62E-03	3.24E-05
				Fluoranthene	206440		9.10E-05	1.43E-04	2.85E-06
				Fluorene	86737		6.32E-04	9.90E-04	1.98E-05
				Formaldehyde	50000		1.88E+00	2.94E+00	5.87E-02
				Methanol	67561		2.80E-01	4.38E-01	8.77E-03
				Methylene chloride	74953		3.77E-03	5.90E-03	1.18E-04
				Naphthalene	91203		8.88E-03	1.39E-02	2.78E-04
				PAH *	1150		1.29E-02	2.02E-02	4.04E-04
				Phenanthrene	85018		6.47E-04	1.01E-03	2.03E-05
				Propylene	115071		1.46E+00	2.29E+00	4.58E-02
				Pyrene	129000		1.64E-04	2.56E-04	5.13E-06
				Styrene	100425		1.09E-03	1.70E-03	3.41E-05
				Toluene	108883		5.11E-02	7.99E-02	1.60E-03
				Vinyl chloride	75014		6.57E-04	1.03E-03	2.06E-05
				Xylenes	1330207		1.78E-02	2.79E-02	5.59E-04

Table 20: Emissions from the IC engine replacing an existing emergency generator at B333

Engine	Fuel	Capacity bhp	Fuel Rate mgal/hr	Pollutant	AB2588 ID	Emission Factor		Emissions	
						g/bhp-hr	lb/mgal	lb/yr	lb/hr
PSI 21.9 CAC	LPG	472	0.038443	NOx	42603	0.023862	0.6	1.2404	0.0248
				SOx	42401		0.4	0.6727	0.0135
				CO	42101	0.251301	6.8	13.0632	0.2613
				PM	11101		5.0	9.6107	0.1922
				PM-Filterable	11105		2.5	4.8053	0.0961
				PM10	85101		5.0	9.6107	0.1922
				PM10-Filterable	85105		2.5	4.8053	0.0961
				PM2.5	88101		5.0	9.6107	0.1922
				PM2.5-Filterable	88105		2.5	4.8053	0.0961
				VOC	43101	0.035048	0.9	1.8219	0.0364
				Lead	12128		0	0.0000	0.0000
				Ammonia-Crit	42604		0	0.0000	0.0000
				1,1 - Dichloroethane	75343		1.03E-03	1.99E-03	3.97E-05
				1,1,2 - Trichloroetrhane	79005		1.40E-03	2.69E-03	5.38E-05
				1,1,2,2 - Tetrachloroethane	79345		2.31E-03	4.45E-03	8.90E-05
				1,2 - Dichloropropane	78875		1.19E-03	2.29E-03	4.57E-05
				1,3 - Dichloropropene	542756		1.16E-03	2.23E-03	4.47E-05
				1,3-Butadiene	106990		6.07E-02	1.17E-01	2.33E-03
				Acenaphthene	83329		1.78E-04	3.41E-04	6.82E-06
				Acenaphthylene	208968		1.33E-03	2.55E-03	5.10E-05
				Acetaldehyde	75070		2.55E-01	4.91E-01	9.81E-03
				Acrolein	107028		2.41E-01	4.63E-01	9.25E-03
				Benzene	71432		1.75E-01	3.36E-01	6.72E-03
				Benzo(b)fluoranthenen	205992		2.17E-05	4.17E-05	8.34E-07
				Benzo(g,h,l)perylene	191242		1.78E-05	3.43E-05	6.86E-07
				Benzo(k)fluoranthene	207089		9.42E-06	1.81E-05	3.62E-07
				Butyr/Isobutyaldehyde	78842		4.45E-03	8.55E-03	1.71E-04
				Carbon tetrachloride	56235		1.62E-03	3.11E-03	6.23E-05
				Chlorobenzene	108907		1.18E-03	2.27E-03	4.54E-05
				Chloroform	67663		1.25E-03	2.41E-03	4.82E-05
				Chrysene	218019		2.84E-05	5.45E-05	1.09E-06
				Ethyl benzene	100414		2.27E-04	4.36E-04	8.72E-06
				Ethylene dibromide	106934		1.95E-03	3.75E-03	7.49E-05
				Ethylene Dichloride	107062		1.03E-03	1.99E-03	3.97E-05
				Fluoranthene	206440		9.10E-05	1.75E-04	3.50E-06
				Fluorene	86737		6.32E-04	1.22E-03	2.43E-05
				Formaldehyde	50000		1.88E+00	3.61E+00	7.21E-02
				Methanol	67561		2.80E-01	5.38E-01	1.08E-02
				Methylene chloride	74953		3.77E-03	7.25E-03	1.45E-04
				Naphthalene	91203		8.88E-03	1.71E-02	3.42E-04
				PAH *	1150		1.29E-02	2.48E-02	4.96E-04
				Phenanthrene	85018		6.47E-04	1.24E-03	2.49E-05
				Propylene	115071		1.46E+00	2.81E+00	5.63E-02
				Pyrene	129000		1.64E-04	3.15E-04	6.30E-06
				Styrene	100425		1.09E-03	2.09E-03	4.19E-05
				Toluene	108883		5.11E-02	9.81E-02	1.96E-03
				Vinyl chloride	75014		6.57E-04	1.26E-03	2.53E-05
				Xylenes	1330207		1.78E-02	3.43E-02	6.86E-04

Table 21: Summary of emission estimates used in assessing risk from Northrop sources

AB2588 ID	Pollutant	Emissions (lb/yr)														
		CEIR Data	Paint Hanger (999001)	Boiler 1 (999003)	Boiler 2 (999004)	Boiler 3 (999005)	Boiler 4 (999006)	Boiler 5 (999007)	Boiler 6 (999008)	Boiler 7 (999009)	Boiler 8 (999010)	Emergency Generator (999011)	Lift Station Generator (999012)	B333 Generator (999013)	Total	
42603	Oxides of Nitrogen	23.16	0.00	0.00	0.00	0.00	0.00	0.00	0.00	0.00	0.00	0.00	0.00	0.32	23.49	tons/yr
42101	Carbon Monoxide	34.75	0.00	0.00	0.00	0.00	0.00	0.00	0.00	0.00	0.00	0.00	0.00	0.08	34.85	tons/yr
42401	Oxides of sulfur	0.66	0.01	0.00	0.00	0.00	0.00	0.00	0.00	0.00	0.00	0.00	0.00	0.32	0.99	tons/yr
11101	Particulate Matter	2.73	0.10	0.20	0.20	0.20	0.20	0.20	0.20	0.20	0.20	0.00	0.00	0.08	4.52	tons/yr
11105	PM - noncondensable	1.40	0.02	0.05	0.05	0.05	0.05	0.05	0.05	0.05	0.05	0.00	0.00	0.32	2.15	tons/yr
85101	Particulate Matter 10 Microns or Less (PM10)	2.58	0.10	0.20	0.20	0.20	0.20	0.20	0.20	0.20	0.20	0.12	0.00	0.08	4.48	tons/yr
85105	PM10 - noncondensable	1.38	0.02	0.05	0.05	0.05	0.05	0.05	0.05	0.05	0.05	0.00	0.00	0.82	2.62	tons/yr
88101	Particulate Matter 2.5 Microns or Less	2.39	0.10	0.20	0.20	0.20	0.20	0.20	0.20	0.20	0.20	0.00	0.00	0.03	4.12	tons/yr
88105	PM25 - noncondensable	1.13	0.02	0.05	0.05	0.05	0.05	0.05	0.05	0.05	0.05	0.49	0.00	0.28	2.32	tons/yr
43101	Total Organic Gas	48.10	1.63	0.00	0.00	0.00	0.00	0.00	0.00	0.00	0.00	0.46	0.00	0.47	50.66	tons/yr
12128	Lead	0.0	0.0	0.0	0.0	0.0	0.0	0.0	0.0	0.0	0.0	0.6	0.0		0.56	tons/yr
42604	Ammonia-Crit	0.1	0.0	0.1	0.1	0.1	0.1	0.1	0.1	0.1	0.1	0.0	0.0		0.85	tons/yr
1115	Glycol ethers (and their acetates)	61.6													61.6	lb/yr
1125	Isocyanates	4.0	0.0												4.0	lb/yr
1150	PAHs, total	1.0	0.0	0.0	0.0	0.0	0.0	0.0	0.0	0.0	0.0	0.0	0.0		1.2	lb/yr
1219	Diisocyanates	14.2	0.0											0.1	14.3	lb/yr
1221	Polymeric (Oligo) HDI		0.0												0.0	lb/yr
9901	Diesel engine exhaust, particulate matter	515.0													515.0	lb/yr
50000	Formaldehyde	389.7	1.0	0.9	0.9	0.9	0.9	0.9	0.9	0.9	0.9	3.6	2.9	7.4	411.9	lb/yr
50328	Benzo[a]pyrene		0.0	0.0	0.0	0.0	0.0	0.0	0.0	0.0	0.0			0.0	0.0	lb/yr
53703	Dibenz[a,h]anthracene	0.0	0.0	0.0	0.0	0.0	0.0	0.0	0.0	0.0	0.0			0.0	0.0	lb/yr
56235	Carbon tetrachloride	0.0										0.0	0.0		0.1	lb/yr
56495	3-Methylcholanthrene		0.0	0.0	0.0	0.0	0.0	0.0	0.0	0.0	0.0			0.0	0.0	lb/yr
56553	Benz[a]anthracene		0.0	0.0	0.0	0.0	0.0	0.0	0.0	0.0	0.0			0.0	0.0	lb/yr
57976	7,12-Dimethylbenz[a]anthracene		0.0	0.0	0.0	0.0	0.0	0.0	0.0	0.0	0.0			0.0	0.0	lb/yr
67561	Methanol	22.1	2.5										0.4		25.1	lb/yr
67630	Isopropyl alcohol	37409	45.4												37455	lb/yr
67663	Chloroform	0.0										2.8	0.0		2.8	lb/yr
71363	n-Butyl alcohol	49.8	0.4												50.3	lb/yr
71432	Benzene	172.0	0.5	0.4	0.4	0.4	0.4	0.4	0.4	0.4	0.4	0.0	0.3		176.1	lb/yr
74851	Ethylene	195.4												1.0	196.4	lb/yr
74953	Methylene bromide	0.1										0.0	0.0		0.1	lb/yr
75014	Vinyl chloride	0.0										0.0	0.0		0.0	lb/yr
75070	Acetaldehyde	43.7	0.3	0.2	0.2	0.2	0.2	0.2	0.2	0.2	0.2	0.0	0.4		46.1	lb/yr
75092	Methylene chloride {Dichloromethane}	0.0												0.5	0.5	lb/yr

Table 21: Summary of emission estimates used in assessing risk from Northrop sources

AB2588 ID	Pollutant	Emissions (lb/yr)														
		CEIR Data	Paint Hanger (999001)	Boiler 1 (999003)	Boiler 2 (999004)	Boiler 3 (999005)	Boiler 4 (999006)	Boiler 5 (999007)	Boiler 6 (999008)	Boiler 7 (999009)	Boiler 8 (999010)	Emergency Generator (999011)	Lift Station Generator (999012)	B333 Generator (999013)	Total	
75343	1,1-Dichloroethane	0.0										0.0	0.0		0.0	lb/yr
75456	Chlorodifluoromethane {Freon 22}	248.2													248.2	lb/yr
78842	Isobutyraldehyde											0.0	0.0		0.0	lb/yr
78875	1,2-Dichloropropane	0.0										0.0	0.0		0.0	lb/yr
78922	sec-Butyl alcohol	10471	2.1												10473.3	lb/yr
78933	Methyl ethyl ketone {2-Butanone}	6516.4	53.3												6569.7	lb/yr
79005	1,1,2-Trichloroethane	0										0.0	0.0		0	lb/yr
79107	Acrylic acid	0													0	lb/yr
79345	1,1,2,2-Tetrachloroethane	0.0										0.0	0.0		0.0	lb/yr
80057	4,4'-Isopropylidenediphenol	0.0	0.2												0.2	lb/yr
80159	Cumene hydroperoxide	0.1													0.1	lb/yr
80626	Methyl methacrylate	763.6													763.6	lb/yr
83329	Acenaphthene	0.0	0.0	0.0	0.0	0.0	0.0	0.0	0.0	0.0	0.0	0.0	0.0		0.0	lb/yr
85018	Phenanthrene		0.0	0.0	0.0	0.0	0.0	0.0	0.0	0.0	0.0	0.0	0.0		0.0	lb/yr
85687	Butyl benzyl phthalate	0.5												0.0	0.5	lb/yr
86737	Fluorene		0.0	0.0	0.0	0.0	0.0	0.0	0.0	0.0	0.0	0.0	0.0	0.0	0.0	lb/yr
91203	Naphthalene	11.1	0.0	0.0	0.0	0.0	0.0	0.0	0.0	0.0	0.0	0.0	0.0		11.3	lb/yr
91576	2-Methyl naphthalene		0.0	0.0	0.0	0.0	0.0	0.0	0.0	0.0	0.0			0.0	0.0	lb/yr
95636	1,2,4-Trimethylbenzene	41.8	0.2											0.1	42.0	lb/yr
98566	1-Chloro-4-(trifluoromethyl)benzene [PCBTF]	1863.0	130.8											0.0	1993.8	lb/yr
98828	Cumene	3.9													3.9	lb/yr
100414	Ethyl benzene	309.3	42.2	0.5	0.5	0.5	0.5	0.5	0.5	0.5	0.5	0.0	0.0		355.5	lb/yr
100425	Styrene	4.0										0.0	0.0		4.0	lb/yr
100527	Benzaldehyde		1.0	0.9	0.9	0.9	0.9	0.9	0.9	0.9	0.9				7.9	lb/yr
101688	Methylene diphenyl diisocyanate {MDI}	12.3	0.0												12.3	lb/yr
106934	Ethylene dibromide {EDB}	0.0										0.1	0.0	1.2	1.3	lb/yr
106978	n-Butane		128.8	110.4	110.4	110.4	110.4	110.4	110.4	110.4	110.4				1011.8	lb/yr
106990	1,3-Butadiene	22.7										0.0	0.1		22.8	lb/yr
107028	Acrolein	20.0	0.2	0.1	0.1	0.1	0.1	0.1	0.1	0.1	0.1	0.0	0.4		21.7	lb/yr
107062	Ethylene dichloride {EDC}	0.0										0.0	0.0		0.0	lb/yr
107211	Ethylene glycol	87.8													87.8	lb/yr
107982	Propylene glycol monomethyl ether	382.0												0.5	382.4	lb/yr
108054	Vinyl acetate	0.0													0.0	lb/yr
108101	Methyl isobutyl ketone {Hexone}	14741	1037.4												15778.5	lb/yr
108656	Propylene glycol monomethyl ether acetate	1146.3	232.8												1379.0	lb/yr

Table 21: Summary of emission estimates used in assessing risk from Northrop sources

AB2588 ID	Pollutant	Emissions (lb/yr)														
		CEIR Data	Paint Hanger (999001)	Boiler 1 (999003)	Boiler 2 (999004)	Boiler 3 (999005)	Boiler 4 (999006)	Boiler 5 (999007)	Boiler 6 (999008)	Boiler 7 (999009)	Boiler 8 (999010)	Emergency Generator (999011)	Lift Station Generator (999012)	B333 Generator (999013)	Total	
108678	1,3,5-Trimethylbenzene	2													2	lb/yr
108883	Toluene	674.6	2.9	1.9	1.9	1.9	1.9	1.9	1.9	1.9	1.9	0.1	0.1		693	lb/yr
108907	Chlorobenzene	5										0.0	0.0	4.5	10	lb/yr
108952	Phenol	5.4													5.4	lb/yr
109660	n-Pentane		159.4	136.7	136.7	136.7	136.7	136.7	136.7	136.7	136.7				1252.7	lb/yr
110543	Hexane	58.2	0.4	0.3	0.3	0.3	0.3	0.3	0.3	0.3	0.3				61.3	lb/yr
110827	Cyclohexane	15.4												0.8	16.1	lb/yr
111422	Diethanolamine	0.0													0.0	lb/yr
111466	Diethylene glycol	92.7													92.7	lb/yr
111762	Ethylene glycol monobutyl ether	9.2													9.2	lb/yr
111900	Diethylene glycol monoethyl ether	0.1													0.1	lb/yr
111966	Diethylene glycol dimethyl ether	2.5													2.5	lb/yr
115071	Propylene	363.4										2.8	2.3		368.5	lb/yr
120127	Anthracene		0.0	0.0	0.0	0.0	0.0	0.0	0.0	0.0	0.0				0.0	lb/yr
121448	Triethylamine	0.5													0.5	lb/yr
121697	N,N-Dimethylaniline	43.5													43.5	lb/yr
124174	Diethylene glycol monobutyl ether acetate	7.6												90.1	97.7	lb/yr
129000	Pyrene		0.0	0.0	0.0	0.0	0.0	0.0	0.0	0.0	0.0	0.0	0.0		0.0	lb/yr
191242	Benzo[g,h,i]perylene		0.0	0.0	0.0	0.0	0.0	0.0	0.0	0.0	0.0	3.6	0.0	0.0	3.6	lb/yr
193395	Indeno[1,2,3-cd]pyrene		0.0	0.0	0.0	0.0	0.0	0.0	0.0	0.0	0.0				0.0	lb/yr
205823	Benzo[j]fluoranthene		0.0	0.0	0.0	0.0	0.0	0.0	0.0	0.0	0.0				0.0	lb/yr
205992	Benzo[b]fluoranthene		0.0	0.0	0.0	0.0	0.0	0.0	0.0	0.0	0.0	0.0	0.0		0.0	lb/yr
206440	Fluoranthene	0.0	0.0	0.0	0.0	0.0	0.0	0.0	0.0	0.0	0.0	0.0	0.0		0.0	lb/yr
207089	Benzo[k]fluoranthene											0.0	0.0	0.0	0.0	lb/yr
208968	Acenaphthylene	0.0	0.0	0.0	0.0	0.0	0.0	0.0	0.0	0.0	0.0	0.0	0.0	0.0	0.0	lb/yr
218019	Chrysene		0.0	0.0	0.0	0.0	0.0	0.0	0.0	0.0	0.0	0.0	0.0		0.0	lb/yr
540841	2,2,4-Trimethylpentane	0.0												0.0	0.0	lb/yr
540885	t-Butyl acetate	36.5	2.1											0.0	38.6	lb/yr
542756	1,3-Dichloropropene	0.0										0.0	0.0	0.0	0.0	lb/yr
556672	Octamethylcyclotetrasiloxane {D4}	8.4												0.0	8.4	lb/yr
584849	Toluene-2,4-diisocyanate	0.0	0.0											0.0	0.0	lb/yr
630080	Carbon monoxide	0.8												0.0	0.8	lb/yr
822060	Hexamethylene-1,6-diisocyanate {HDI}	22.0	0.0												22.0	lb/yr
872504	N-methyl-2-pyrrolidone {N-Methylpyrrolidone} {NMP}	0.0													0.0	lb/yr
1330207	Xylenes (mixed)	2587.2	144.9	1.4	1.4	1.4	1.4	1.4	1.4	1.4	1.4	0.0	0.0		2743.5	lb/yr

Table 21: Summary of emission estimates used in assessing risk from Northrop sources

AB2588 ID	Pollutant	Emissions (lb/yr)														
		CEIR Data	Paint Hanger (999001)	Boiler 1 (999003)	Boiler 2 (999004)	Boiler 3 (999005)	Boiler 4 (999006)	Boiler 5 (999007)	Boiler 6 (999008)	Boiler 7 (999009)	Boiler 8 (999010)	Emergency Generator (999011)	Lift Station Generator (999012)	B333 Generator (999013)	Total	
1330785	Tricresyl phosphate {TCP}	2.7													2.7	lb/yr
1344281	Aluminum oxide (fibrous)	1.2													1.2	lb/yr
1634044	Methyl tert-butyl ether	50												3.3	53	lb/yr
2426086	n-Butyl glycidyl ether	0.7													0.7	lb/yr
2807309	Ethylene glycol monopropyl ether	5.2													5.2	lb/yr
4098719	Isophorone diisocyanate {IPDI}	1.0													1.0	lb/yr
7429905	Aluminum	0.0												0.1	0.1	lb/yr
7439921	Lead	1.5	0.0	0.0	0.0	0.0	0.0	0.0	0.0	0.0	0.0			0.1	1.8	lb/yr
7439965	Manganese	0.7	0.0	0.0	0.0	0.0	0.0	0.0	0.0	0.0	0.0			0.0	0.9	lb/yr
7439976	Mercury	0.5	0.0	0.0	0.0	0.0	0.0	0.0	0.0	0.0	0.0			0.4	0.9	lb/yr
7439987	MOLYBDENUM		0.1	0.1	0.1	0.1	0.1	0.1	0.1	0.1	0.1				0.5	lb/yr
7440020	Nickel	1.4	0.1	0.1	0.1	0.1	0.1	0.1	0.1	0.1	0.1			0.0	2.4	lb/yr
7440224	Silver	36.0	0.8											0.7	37.6	lb/yr
7440382	Arsenic	1.3	0.0	0.0	0.0	0.0	0.0	0.0	0.0	0.0	0.0			0.0	1.4	lb/yr
7440393	Barium	3.6	0.3	0.2	0.2	0.2	0.2	0.2	0.2	0.2	0.2			0.2	5.9	lb/yr
7440417	Beryllium	0.0	0.0	0.0	0.0	0.0	0.0	0.0	0.0	0.0	0.0			0.2	0.2	lb/yr
7440439	Cadmium	0.6	0.1	0.1	0.1	0.1	0.1	0.1	0.1	0.1	0.1			0.0	1.2	lb/yr
7440473	Chromium	2.1	0.1	0.1	0.1	0.1	0.1	0.1	0.1	0.1	0.1			0.1	3.0	lb/yr
7440484	Cobalt	0.0	0.0	0.0	0.0	0.0	0.0	0.0	0.0	0.0	0.0			0.4	0.5	lb/yr
7440508	Copper	1.8	0.1	0.0	0.0	0.0	0.0	0.0	0.0	0.0	0.0			4.9	7.2	lb/yr
7440622	Vanadium (fume or dust)	0.8	0.1	0.1	0.1	0.1	0.1	0.1	0.1	0.1	0.1				1.9	lb/yr
7440666	Zinc	11.6	1.8	1.5	1.5	1.5	1.5	1.5	1.5	1.5	1.5				25.6	lb/yr
7647010	Hydrochloric acid	20.0	7.3												27.2	lb/yr
7664382	Phosphoric acid	20.0													20.0	lb/yr
7664393	Hydrogen fluoride		24.3											0.0	24.3	lb/yr
7664417	Ammonia	231.0	83.5	168.2	168.2	168.2	168.2	168.2	168.2	168.2	168.2	0.0			1660.0	lb/yr
7782492	Selenium	1.5	0.0	0.0	0.0	0.0	0.0	0.0	0.0	0.0	0.0				1.5	lb/yr
7783064	Hydrogen sulfide	0.0													0.0	lb/yr
7789062	Strontium chromate	0.3	0.0												0.3	lb/yr
10294403	Barium chromate	0.0	0.0												0.0	lb/yr
13674845	Tris(1-chloro-2-propyl)phosphate {TCPP}	0.2												0.2	0.4	lb/yr
14464461	Silica, crystalline (respirable), in the form of cristobalite	0.0													0.0	lb/yr
14808607	Silica, crystalline (respirable), in the form of quartz	3.7	0.1												3.7	lb/yr
16065831	Chromium(III) Compounds		0.0												0.0	lb/yr

Table 22: Hourly emission rates used in estimating risk from the Phase III expansion

AB2588 ID	Pollutant	Emissions (lb/hr)													
		CEIR Data	Paint Hanger (999001)	Boiler 1 (999003)	Boiler 2 (999004)	Boiler 3 (999005)	Boiler 4 (999006)	Boiler 5 (999007)	Boiler 6 (999008)	Boiler 7 (999009)	Boiler 8 (999010)	Emergency Generator (999011)	Lift Station Generator (999012)	B333 Generator (999013)	Total
42603	Oxides of Nitrogen	348.05	0.00	0.00	0.00	0.00	0.00	0.00	0.00	0.00	0.00	0.04	0.05	0.02	348.16
42101	Carbon Monoxide	124.60	0.00	0.00	0.00	0.00	0.00	0.00	0.00	0.00	0.00	0.26	0.18	0.26	125.30
42401	Oxides of sulfur	19.13	0.00	0.00	0.00	0.00	0.00	0.00	0.00	0.00	0.00	0.00	0.01	0.01	19.16
11101	Particulate Matter	35.01	0.02	0.05	0.05	0.05	0.05	0.05	0.05	0.05	0.05	0.07	0.16	0.19	35.81
11105	PM - noncondensable	8.77	0.01	0.01	0.01	0.01	0.01	0.01	0.01	0.01	0.01	0.03	0.08	0.10	9.08
85101	Particulate Matter 10 Microns or Less	271.48	0.02	0.05	0.05	0.05	0.05	0.05	0.05	0.05	0.05	0.07	0.16	0.19	272.28
85105	PM10 - noncondensable	10.88	0.01	0.01	0.01	0.01	0.01	0.01	0.01	0.01	0.01	0.03	0.08	0.10	11.19
88101	Particulate Matter 2.5 Microns or Less	47.49	0.02	0.05	0.05	0.05	0.05	0.05	0.05	0.05	0.05	0.07	0.16	0.19	48.30
88105	PM25 - noncondensable	9.30	0.01	0.01	0.01	0.01	0.01	0.01	0.01	0.01	0.01	0.03	0.08	0.10	9.60
43101	Total Organic Gas	21.93	260.28	0.00	0.00	0.00	0.00	0.00	0.00	0.00	0.00	0.01	0.05	0.04	282.32
12128	Lead	0.0	0.0	0.0	0.0	0.0	0.0	0.0	0.0	0.0	0.0	0.0	0.0	0.0	0.03
42604	Ammonia-Crit	3.1	0.0	0.0	0.0	0.0	0.0	0.0	0.0	0.0	0.0	0.0	0.0	0.0	3.28
1115	Glycol ethers (and their acetates)	3.1E-02													3.1E-02
1125	Isocyanates	2.0E-03	2.5E-05												2.0E-03
1150	PAHs, total	1.0E-02	1.2E-06	2.4E-06	2.4E-06	2.4E-06	2.4E-06	2.4E-06	2.4E-06	2.4E-06	2.4E-06	4.9E-04	4.0E-04	5.0E-04	1.1E-02
1219	Diisocyanates	7.1E-03	6.0E-04												7.7E-03
1221	Polymeric (Oligo) HDI		3.0E-05												3.0E-05
9901	Diesel engine exhaust, particulate matter	5.1E+00													5.1E+00
50000	Formaldehyde	1.3E+00	2.4E-04	1.0E-04	1.0E-04	1.0E-04	1.0E-04	1.0E-04	1.0E-04	1.0E-04	1.0E-04	7.2E-02	5.9E-02	7.2E-02	1.5E+00
50328	Benzo[a]pyrene		4.8E-09	9.6E-09	9.6E-09	9.6E-09	9.6E-09	9.6E-09	9.6E-09	9.6E-09	9.6E-09				8.2E-08
53703	Dibenz[a,h]anthracene	6.2E-06	4.8E-09	9.6E-09	9.6E-09	9.6E-09	9.6E-09	9.6E-09	9.6E-09	9.6E-09	9.6E-09				6.3E-06
56235	Carbon tetrachloride	5.5E-05										6.2E-05	5.1E-05	6.2E-05	2.3E-04
56495	3-Methylcholanthrene		5.4E-09	1.1E-08	1.1E-08	1.1E-08	1.1E-08	1.1E-08	1.1E-08	1.1E-08	1.1E-08				9.2E-08
56553	Benz[a]anthracene		5.4E-09	1.1E-08	1.1E-08	1.1E-08	1.1E-08	1.1E-08	1.1E-08	1.1E-08	1.1E-08				9.2E-08
57976	7,12-Dimethylbenz[a]anthracene		4.8E-08	9.6E-08	9.6E-08	9.6E-08	9.6E-08	9.6E-08	9.6E-08	9.6E-08	9.6E-08				8.2E-07
67561	Methanol	5.2E-03	8.7E-03										8.8E-03	1.1E-02	3.3E-02
67630	Isopropyl alcohol	1.9E+01	1.6E-01												1.9E+01
67663	Chloroform	4.3E-05										4.8E-05	3.9E-05	4.8E-05	1.8E-04
71363	n-Butyl alcohol	2.5E-02	5.8E-03												3.1E-02
71432	Benzene	2.2E-01	2.4E-05	4.8E-05	4.8E-05	4.8E-05	4.8E-05	4.8E-05	4.8E-05	4.8E-05	4.8E-05	2.6E-04	5.5E-03	6.7E-03	2.3E-01
74851	Ethylene	2.6E-02													2.6E-02
74953	Methylene bromide	1.3E-04										1.4E-04	1.2E-04	1.4E-04	5.4E-04

Table 22: Hourly emission rates used in estimating risk from the Phase III expansion

AB2588 ID	Pollutant	Emissions (lb/hr)													
		CEIR Data	Paint Hanger (999001)	Boiler 1 (999003)	Boiler 2 (999004)	Boiler 3 (999005)	Boiler 4 (999006)	Boiler 5 (999007)	Boiler 6 (999008)	Boiler 7 (999009)	Boiler 8 (999010)	Emergency Generator (999011)	Lift Station Generator (999012)	B333 Generator (999013)	Total
75014	Vinyl chloride	2.2E-05										2.5E-05	2.1E-05	2.5E-05	9.3E-05
75070	Acetaldehyde	2.7E-01	1.3E-05	2.6E-05	2.6E-05	2.6E-05	2.6E-05	2.6E-05	2.6E-05	2.6E-05	2.6E-05	9.8E-03	8.0E-03	9.8E-03	3.0E-01
75092	Methylene chloride {Dichloromethane}	7.9E-07													7.9E-07
75343	1,1-Dichloroethane	3.5E-05										4.0E-05	3.2E-05	4.0E-05	1.5E-04
75456	Chlorodifluoromethane {Freon 22}	7.5E-02													7.5E-02
78842	Isobutyraldehyde											1.7E-04	1.4E-04	1.7E-04	4.8E-04
78875	1,2-Dichloropropane	4.1E-05										4.5E-05	3.7E-05	4.6E-05	1.7E-04
78922	sec-Butyl alcohol	5.2E+00	1.1E-01												5.3E+00
78933	Methyl ethyl ketone {2-Butanone}	3.3E+00	3.1E-01												3.6E+00
79005	1,1,2-Trichloroethane	4.8E-05										5.4E-05	4.4E-05	5.4E-05	2.0E-04
79107	Acrylic acid	5.0E-05													5.0E-05
79345	1,1,2,2-Tetrachloroethane	7.9E-05										8.9E-05	7.2E-05	8.9E-05	3.3E-04
80057	4,4'-Isopropylidenediphenol	5.7E-06	3.5E-03												3.5E-03
80159	Cumene hydroperoxide	7.1E-05													7.1E-05
80626	Methyl methacrylate	3.8E-01													3.8E-01
83329	Acenaphthene	9.4E-05	5.4E-09	1.1E-08	1.1E-08	1.1E-08	1.1E-08	1.1E-08	1.1E-08	1.1E-08	1.1E-08	6.8E-06	5.6E-06	6.8E-06	1.1E-04
85018	Phenanthrene		5.1E-08	1.0E-07	1.0E-07	1.0E-07	1.0E-07	1.0E-07	1.0E-07	1.0E-07	1.0E-07	2.5E-05	2.0E-05	2.5E-05	7.1E-05
85687	Butyl benzyl phthalate	2.5E-04													2.5E-04
86737	Fluorene		8.3E-09	1.7E-08	1.7E-08	1.7E-08	1.7E-08	1.7E-08	1.7E-08	1.7E-08	1.7E-08	2.4E-05	2.0E-05	2.4E-05	6.8E-05
91203	Naphthalene	2.8E-02	8.9E-07	1.8E-06	1.8E-06	1.8E-06	1.8E-06	1.8E-06	1.8E-06	1.8E-06	1.8E-06	3.4E-04	2.8E-04	3.4E-04	2.9E-02
91576	2-Methyl naphthalene		7.2E-08	1.4E-07	1.4E-07	1.4E-07	1.4E-07	1.4E-07	1.4E-07	1.4E-07	1.4E-07				1.2E-06
95636	1,2,4-Trimethylbenzene	9.9E-03	6.5E-03												1.6E-02
98566	1-Chloro-4-(trifluoromethyl)benzene [PCBTF]	9.3E-01	2.8E+00												3.7E+00
98828	Cumene	1.5E-03													1.5E-03
100414	Ethyl benzene	1.5E-01	6.9E-01	5.7E-05	5.7E-05	5.7E-05	5.7E-05	5.7E-05	5.7E-05	5.7E-05	5.7E-05	8.7E-06	7.1E-06	8.7E-06	8.5E-01
100425	Styrene	9.7E-03										4.2E-05	3.4E-05	4.2E-05	9.9E-03
100527	Benzaldehyde		4.9E-05	9.8E-05	9.8E-05	9.8E-05	9.8E-05	9.8E-05	9.8E-05	9.8E-05	9.8E-05				8.4E-04
101688	Methylene diphenyl diisocyanate {MDI}	6.1E-03	6.1E-05												6.2E-03
106934	Ethylene dibromide {EDB}	6.7E-05										7.5E-05	6.1E-05	7.5E-05	2.8E-04
106978	n-Butane		6.3E-03	1.3E-02	1.3E-02	1.3E-02	1.3E-02	1.3E-02	1.3E-02	1.3E-02	1.3E-02				1.1E-01
106990	1,3-Butadiene	5.7E-02										2.3E-03	1.9E-03	2.3E-03	6.3E-02
107028	Acrolein	2.2E-02	8.0E-06	1.6E-05	1.6E-05	1.6E-05	1.6E-05	1.6E-05	1.6E-05	1.6E-05	1.6E-05	9.2E-03	7.5E-03	9.3E-03	4.8E-02

Table 22: Hourly emission rates used in estimating risk from the Phase III expansion

AB2588 ID	Pollutant	Emissions (lb/hr)													
		CEIR Data	Paint Hanger (999001)	Boiler 1 (999003)	Boiler 2 (999004)	Boiler 3 (999005)	Boiler 4 (999006)	Boiler 5 (999007)	Boiler 6 (999008)	Boiler 7 (999009)	Boiler 8 (999010)	Emergency Generator (999011)	Lift Station Generator (999012)	B333 Generator (999013)	Total
107062	Ethylene dichloride {EDC}	3.5E-05										4.0E-05	3.2E-05	4.0E-05	1.5E-04
107211	Ethylene glycol	4.4E-02													4.4E-02
107982	Propylene glycol monomethyl ether	1.9E-01													1.9E-01
108054	Vinyl acetate	1.3E-05													1.3E-05
108101	Methyl isobutyl ketone {Hexone}	7.3E+00	3.4E+00												1.1E+01
108656	Propylene glycol monomethyl ether acetate	5.7E-01	2.6E+00												3.1E+00
108678	1,3,5-Trimethylbenzene	7.7E-04													7.7E-04
108883	Toluene	3.5E-01	5.2E-02	2.2E-04	2.2E-04	2.2E-04	2.2E-04	2.2E-04	2.2E-04	2.2E-04	2.2E-04	2.0E-03	1.6E-03	2.0E-03	4.1E-01
108907	Chlorobenzene	2.7E-03										4.5E-05	3.7E-05	4.5E-05	2.8E-03
108952	Phenol	2.7E-03													2.7E-03
109660	n-Pentane		7.7E-03	1.6E-02	1.6E-02	1.6E-02	1.6E-02	1.6E-02	1.6E-02	1.6E-02	1.6E-02				1.3E-01
110543	Hexane	2.4E-02	1.9E-05	3.8E-05	3.8E-05	3.8E-05	3.8E-05	3.8E-05	3.8E-05	3.8E-05	3.8E-05				2.5E-02
110827	Cyclohexane	3.8E-03													3.8E-03
111422	Diethanolamine	3.8E-07													3.8E-07
111466	Diethylene glycol	4.6E-02													4.6E-02
111762	Ethylene glycol monobutyl ether	4.6E-03													4.6E-03
111900	Diethylene glycol monoethyl ether	3.5E-05													3.5E-05
111966	Diethylene glycol dimethyl ether	9.8E-04													9.8E-04
115071	Propylene	3.7E-01										5.6E-02	4.6E-02	5.6E-02	5.3E-01
120127	Anthracene		7.2E-09	1.4E-08	1.4E-08	1.4E-08	1.4E-08	1.4E-08	1.4E-08	1.4E-08	1.4E-08				1.2E-07
121448	Triethylamine	2.3E-04													2.3E-04
121697	N,N-Dimethylaniline	2.2E-02													2.2E-02
124174	Diethylene glycol monobutyl ether acetate	3.8E-03													3.8E-03
129000	Pyrene		1.5E-08	3.0E-08	3.0E-08	3.0E-08	3.0E-08	3.0E-08	3.0E-08	3.0E-08	3.0E-08	6.3E-06	5.1E-06	6.3E-06	1.8E-05
191242	Benzo[g,h,i]perylene		4.8E-09	9.6E-09	9.6E-09	9.6E-09	9.6E-09	9.6E-09	9.6E-09	9.6E-09	9.6E-09	6.8E-07	5.6E-07	6.9E-07	2.0E-06
193395	Indeno[1,2,3-cd]pyrene		5.4E-09	1.1E-08	1.1E-08	1.1E-08	1.1E-08	1.1E-08	1.1E-08	1.1E-08	1.1E-08				9.2E-08
205823	Benzo[j]fluoranthene		5.4E-09	1.1E-08	1.1E-08	1.1E-08	1.1E-08	1.1E-08	1.1E-08	1.1E-08	1.1E-08				9.2E-08
205992	Benzo[b]fluoranthene		5.4E-09	1.1E-08	1.1E-08	1.1E-08	1.1E-08	1.1E-08	1.1E-08	1.1E-08	1.1E-08	8.3E-07	6.8E-07	8.3E-07	2.4E-06
206440	Fluoranthene	9.6E-05	8.9E-09	1.8E-08	1.8E-08	1.8E-08	1.8E-08	1.8E-08	1.8E-08	1.8E-08	1.8E-08	3.5E-06	2.9E-06	3.5E-06	1.1E-04
207089	Benzo[k]fluoranthene											3.6E-07	3.0E-07	3.6E-07	1.0E-06
208968	Acenaphthylene	3.3E-04	5.4E-09	1.1E-08	1.1E-08	1.1E-08	1.1E-08	1.1E-08	1.1E-08	1.1E-08	1.1E-08	5.1E-05	4.2E-05	5.1E-05	4.7E-04
218019	Chrysene		5.4E-09	1.1E-08	1.1E-08	1.1E-08	1.1E-08	1.1E-08	1.1E-08	1.1E-08	1.1E-08	1.1E-06	8.9E-07	1.1E-06	3.2E-06

Table 22: Hourly emission rates used in estimating risk from the Phase III expansion

AB2588 ID	Pollutant	Emissions (lb/hr)													
		CEIR Data	Paint Hanger (999001)	Boiler 1 (999003)	Boiler 2 (999004)	Boiler 3 (999005)	Boiler 4 (999006)	Boiler 5 (999007)	Boiler 6 (999008)	Boiler 7 (999009)	Boiler 8 (999010)	Emergency Generator (999011)	Lift Station Generator (999012)	B333 Generator (999013)	Total
540841	2,2,4-Trimethylpentane	1.7E-05													1.7E-05
540885	t-Butyl acetate	1.8E-02	1.1E-01												1.3E-01
542756	1,3-Dichloropropene	4.0E-05										4.4E-05	3.6E-05	4.5E-05	1.7E-04
556672	Octamethylcyclotetrasiloxane {D4}	4.2E-03													4.2E-03
584849	Toluene-2,4-diisocyanate	4.9E-06	1.5E-06												6.5E-06
630080	Carbon monoxide	4.2E-04													4.2E-04
822060	Hexamethylene-1,6-diisocyanate {HDI}	1.1E-02	7.1E-05												1.1E-02
872504	N-methyl-2-pyrrolidone	1.6E-05													1.6E-05
1330207	Xylenes (mixed)	1.3E+00	2.3E+00	1.6E-04	1.6E-04	1.6E-04	1.6E-04	1.6E-04	1.6E-04	1.6E-04	1.6E-04	6.8E-04	5.6E-04	6.9E-04	3.6E+00
1330785	Tricresyl phosphate {TCP}	1.4E-03													1.4E-03
1344281	Aluminum oxide (fibrous)	5.9E-04													5.9E-04
1634044	Methyl tert-butyl ether	5.7E-03													5.7E-03
2426086	n-Butyl glycidyl ether	3.6E-04													3.6E-04
2807309	Ethylene glycol monopropyl ether	2.6E-03													2.6E-03
4098719	Isophorone diisocyanate {IPDI}	5.2E-04													5.2E-04
7429905	Aluminum	1.8E-07													1.8E-07
7439921	Lead	2.4E-02	1.5E-06	3.0E-06	3.0E-06	3.0E-06	3.0E-06	3.0E-06	3.0E-06	3.0E-06	3.0E-06				2.4E-02
7439965	Manganese	9.1E-03	1.1E-06	2.3E-06	2.3E-06	2.3E-06	2.3E-06	2.3E-06	2.3E-06	2.3E-06	2.3E-06				9.1E-03
7439976	Mercury	6.7E-03	7.7E-07	1.6E-06	1.6E-06	1.6E-06	1.6E-06	1.6E-06	1.6E-06	1.6E-06	1.6E-06				6.8E-03
7439987	MOLYBDENUM		3.3E-06	6.6E-06	6.6E-06	6.6E-06	6.6E-06	6.6E-06	6.6E-06	6.6E-06	6.6E-06				5.6E-05
7440020	Nickel	1.2E-02	6.3E-06	1.3E-05	1.3E-05	1.3E-05	1.3E-05	1.3E-05	1.3E-05	1.3E-05	1.3E-05				1.2E-02
7440224	Silver	1.8E-02	8.9E-03												2.7E-02
7440382	Arsenic	2.3E-02	6.0E-07	1.2E-06	1.2E-06	1.2E-06	1.2E-06	1.2E-06	1.2E-06	1.2E-06	1.2E-06				2.3E-02
7440393	Barium	2.4E-03	1.3E-05	2.6E-05	2.6E-05	2.6E-05	2.6E-05	2.6E-05	2.6E-05	2.6E-05	2.6E-05				2.6E-03
7440417	Beryllium	3.7E-06	3.6E-08	7.2E-08	7.2E-08	7.2E-08	7.2E-08	7.2E-08	7.2E-08	7.2E-08	7.2E-08				4.3E-06
7440439	Cadmium	4.7E-03	3.5E-06	6.6E-06	6.6E-06	6.6E-06	6.6E-06	6.6E-06	6.6E-06	6.6E-06	6.6E-06				4.7E-03
7440473	Chromium	9.6E-03	4.2E-06	8.4E-06	8.4E-06	8.4E-06	8.4E-06	8.4E-06	8.4E-06	8.4E-06	8.4E-06				9.7E-03
7440484	Cobalt	2.6E-05	2.5E-07	5.0E-07	5.0E-07	5.0E-07	5.0E-07	5.0E-07	5.0E-07	5.0E-07	5.0E-07				3.0E-05
7440508	Copper	1.3E-02	2.5E-06	5.1E-06	5.1E-06	5.1E-06	5.1E-06	5.1E-06	5.1E-06	5.1E-06	5.1E-06				1.3E-02
7440622	Vanadium (fume or dust)	7.1E-04	6.9E-06	1.4E-05	1.4E-05	1.4E-05	1.4E-05	1.4E-05	1.4E-05	1.4E-05	1.4E-05				8.2E-04
7440666	Zinc	2.4E-02	8.7E-05	1.7E-04	1.7E-04	1.7E-04	1.7E-04	1.7E-04	1.7E-04	1.7E-04	1.7E-04				2.5E-02
7647010	Hydrochloric acid	5.3E-02	1.6E-01												2.2E-01

Table 22: Hourly emission rates used in estimating risk from the Phase III expansion

AB2588 ID	Pollutant	Emissions (lb/hr)													
		CEIR Data	Paint Hanger (999001)	Boiler 1 (999003)	Boiler 2 (999004)	Boiler 3 (999005)	Boiler 4 (999006)	Boiler 5 (999007)	Boiler 6 (999008)	Boiler 7 (999009)	Boiler 8 (999010)	Emergency Generator (999011)	Lift Station Generator (999012)	B333 Generator (999013)	Total
7664382	Phosphoric acid	1.0E-02													1.0E-02
7664393	Hydrogen fluoride		5.4E-01												5.4E-01
7664417	Ammonia	2.9E+00	9.5E-03	1.9E-02	1.9E-02	1.9E-02	1.9E-02	1.9E-02	1.9E-02	1.9E-02	1.9E-02	1.1E-02			3.1E+00
7782492	Selenium	2.7E-02	7.2E-08	1.4E-07	1.4E-07	1.4E-07	1.4E-07	1.4E-07	1.4E-07	1.4E-07	1.4E-07				2.7E-02
7783064	Hydrogen sulfide	1.5E-05													1.5E-05
7789062	Strontium chromate	1.3E-04	2.9E-04												4.1E-04
10294403	Barium chromate	1.7E-05	2.9E-05												4.5E-05
13674845	Tris(1-chloro-2-propyl)phosphate {TCPP}	9.2E-05													9.2E-05
14464461	Silica, crystalline (respirable), cristobalite	1.3E-05													1.3E-05
14808607	Silica, crystalline (respirable), quartz	1.8E-03	1.3E-03												3.1E-03
16065831	Chromium(III) Compounds		2.2E-07												2.2E-07
18540299	Chromium, hexavalent (& compounds)	6.9E-04													6.9E-04
25265718	Dipropylene glycol	6.9E-05	1.0E-02												1.0E-02
25321226	Dichlorobenzenes (mixed isomers)		3.6E-06	7.2E-06	7.2E-06	7.2E-06	7.2E-06	7.2E-06	7.2E-06	7.2E-06	7.2E-06				6.1E-05
26471625	Toluene diisocyanates	1.0E-06													1.0E-06
34590948	Dipropylene glycol monomethyl ether	1.2E-05													1.2E-05

Table 23: Hazards associated with chemicals emitted from Northrop Sites 3 and 4

CAS	Chemical	Inhalation Cancer Slope	Oral Cancer Slope	Inhalation Chronic REL	Oral Chronic REL	Acute REL
1115	Glycol ethers (and their acetates)					
1125	Isocyanates					
1150	PAHs, total, with individ. components also reported					
1221	Polymeric (Oligo) HDI			0.4		4.5
9901	Diesel engine exhaust, particulate matter (Diesel PM)	1.1		5		
50000	Formaldehyde	0.021		9		55
50328	Benzo[a]pyrene	3.9	12			
53703	Dibenz[a,h]anthracene	4.1	4.1			
56235	Carbon tetrachloride	0.15		40		1900
56495	3-Methylcholanthrene	22	22			
56553	Benz[a]anthracene	0.39	1.2			
57976	7,12-Dimethylbenz[a]anthracene	250	250			
67561	Methanol			4000		28000
67630	Isopropyl alcohol			7000		3200
67663	Chloroform	0.019		300		150
71363	n-Butyl alcohol					
71432	Benzene	0.1		3		27
74851	Ethylene					
74953	Methylene bromide					
75014	Vinyl chloride	0.27				180000
75070	Acetaldehyde	0.01		140		470
75092	Methylene chloride {Dichloromethane}	0.0035		400		14000
75343	1,1-Dichloroethane	0.0057				
75456	Chlorodifluoromethane {Freon 22}					
78842	Isobutyraldehyde					
78875	1,2-Dichloropropane					
78922	sec-Butyl alcohol					
78933	Methyl ethyl ketone {2-Butanone}					13000
79005	1,1,2-Trichloroethane	0.057				
79107	Acrylic acid					6000
79345	1,1,2,2-Tetrachloroethane	0.2				
80057	4,4'-Isopropylidenediphenol					
80159	Cumene hydroperoxide					
80626	Methyl methacrylate					
83329	Acenaphthene					
85018	Phenanthrene					
85687	Butyl benzyl phthalate					
86737	Fluorene					
91203	Naphthalene	0.12		9		
91576	2-Methyl naphthalene					
95636	1,2,4-Trimethylbenzene					
98566	1-Chloro-4-(trifluoromethyl)benzene [PCBTF]	0.03				
98828	Cumene					
100414	Ethyl benzene	0.0087		2000		
100425	Styrene			900		21000
101688	Methylene diphenyl diisocyanate {MDI}			0.08		12
106934	Ethylene dibromide {EDB}	0.25		0.8		
106990	1,3-Butadiene	0.6		2		660
107028	Acrolein			0.35		2.5
107062	Ethylene dichloride {EDC}	0.072		400		
107211	Ethylene glycol			400		
107982	Propylene glycol monomethyl ether			7000		
108054	Vinyl acetate			200		
108101	Methyl isobutyl ketone {Hexone}					
108656	Propylene glycol monomethyl ether acetate					
108883	Toluene			420		5000
108907	Chlorobenzene			1000		
108952	Phenol			200		5800
110543	Hexane			7000		
110827	Cyclohexane					

Table 23: Hazards associated with chemicals emitted from Northrop Sites 3 and 4

CAS	Chemical	Inhalation Cancer Slope	Oral Cancer Slope	Inhalation Chronic REL	Oral Chronic REL	Acute REL
111422	Diethanolamine			3		
111466	Diethylene glycol					
111762	Ethylene glycol monobutyl ether			82		4700
111900	Diethylene glycol monoethyl ether					
111966	Diethylene glycol dimethyl ether					
115071	Propylene			3000		
120127	Anthracene					
121448	Triethylamine			200		2800
121697	N,N-Dimethylaniline					
129000	Pyrene					
191242	Benzo[g,h,i]perylene					
193395	Indeno[1,2,3-cd]pyrene	0.39	1.2			
205823	Benzo[j]fluoranthene	0.39	1.2			
205992	Benzo[b]fluoranthene	0.39	1.2			
206440	Fluoranthene					
207089	Benzo[k]fluoranthene	0.39	1.2			
208968	Acenaphthylene					
218019	Chrysene	0.039	0.12			
540841	2,2,4-Trimethylpentane					
540885	t-Butyl acetate	0.0047	0.005	0	0	0
542756	1,3-Dichloropropene					
584849	Toluene-2,4-diisocyanate	0.039		0.008		2
630080	Carbon monoxide					23000
822060	Hexamethylene-1,6-diisocyanate			0.03		0.3
1330207	Xylenes (mixed)			700		22000
1344281	Aluminum oxide (fibrous)					
1634044	Methyl tert-butyl ether	0.0018		8000		
2807309	Ethylene glycol monopropyl ether					
7429905	Aluminum					
7439921	Lead	0.042	0.0085			
7439965	Manganese			0.09		
7439976	Mercury			0.03	0.00016	0.6
7440020	Nickel	0.91		0.014	0.011	0.2
7440224	Silver					
7440382	Arsenic	12	1.5	0.015	0.0000035	0.2
7440393	Barium					
7440417	Beryllium	8.4		0.007	0.002	
7440439	Cadmium	15		0.02	0.0005	
7440473	Chromium					
7440484	Cobalt	27				
7440508	Copper					100
7440622	Vanadium (fume or dust)					30
7440666	Zinc					
7647010	Hydrochloric acid			9		2100
7664382	Phosphoric acid			7		
7664393	Hydrogen fluoride			14	0.04	240
7664417	Ammonia			200		3200
7782492	Selenium			20	0.005	
7783064	Hydrogen sulfide			10		42
7789062	Strontium chromate	510	0.5	0.2	0.02	
10294403	Barium chromate	510	0.5	0.2	0.02	
14464461	Silica, crystalline (respirable), in the form of cristobalite			3		
14808607	Silica, crystalline (respirable), in the form of quartz			3		
16065831	Chromium (III)			0.06		0.48
18540299	Chromium, hexavalent (& compounds)	510	0.5	0.2	0.02	
25265718	Dipropylene glycol					
25321226	Dichlorobenzenes (mixed isomers)					
26471625	Toluene diisocyanates	0.039		0.008		2
34590948	Dipropylene glycol monomethyl ether					

Table 24: Source data used in estimating impacts from operations at the Northrop sites

Source ID	Description	Type	Stack ID	Location (m)			Source Data						
				Easting m	Northing m	Elev m	Height m	Diam m	Temp Deg K	Velocity m/s	Volume m3/s	Sigma Y ft	Sigma Z ft
S0001	VENT; 401-MHB HIGH BAY	POINT	50628	401799.6	3833773	756	32.00	0.91	299.8	0.10	0.07		
S0002	VENT; 401-MLB LOW BAY	POINT	50629	401697.9	3833782	756	19.81	0.91	299.8	0.10	0.07		
S0003	VENT; 430-M MANUFACTURING	POINT	50637	402238.5	3833507	757	21.34	0.91	299.8	0.10	0.07		
S0004	VENT; T336-H HUSH HOUSE	POINT	50653	400872.9	3833953	755	5.18	0.91	299.8	0.10	0.07		
S0005	VENT; ALL-F FACILITIES/MAINTENANCE	POINT	50693	401361.3	3833731	756	1.52	0.91	299.8	0.10	0.07		
S0006	VENT; ALL-L LABORATORY	POINT	50694	401895.2	3833691	756	1.52	0.91	299.8	0.10	0.07		
S0007	VENT; 301-MC CENTER BAY	POINT	50702	401059.8	3833372	758	21.34	0.91	299.8	0.10	0.07		
S0008	VENT; 464-JSFWH JSF WAREHOUSE	POINT	50711	401443.9	3833997	754	7.92	0.91	299.8	0.10	0.07		
S0009	VENT; 740-GH GLOBAL HAWK	POINT	50716	399598.3	3831463	774	12.19	0.91	299.8	0.10	0.07		
S0010	VENT; ALL-GSE GOVT SUPPORT EQUIP	POINT	50717	401361.3	3833731	756	1.52	0.91	299.8	0.10	0.07		
S0011	VENT; 435 MANUFACTURING OPERATIONS	POINT	50718	402099.7	3833434	758	23.77	0.91	299.8	0.10	0.07		
S0012	VENT; 307 MANUFACTURING OPERATIONS	POINT	50719	401018.3	3833502	757	21.34	0.91	299.8	0.10	0.07		
S0013	VENT; 870 WAREHOUSE OPERATIONS	POINT	50720	398313.3	3831732	780	6.10	0.91	299.8	18.28	12.01		
S0014	VENT; 401-EHB EAST HIGH BAY	POINT	50721	401709.7	3833691	756	32.00	0.91	294.3	0.10	0.07		
S0015	VENT; 301-AP12	POINT	50724	401059.8	3833372	758	20.12	0.91	294.3	0.10	0.07		
S0016	VENT; 435 TENT AND VENT; 013444	POINT	50728	401086.8	3833372	758	13.11	0.91	294.3	0.10	0.07		
S0017	VENT; 421-MAIN STREET	POINT	50737	401414.4	3833685	756	6.10	0.91	294.3	0.10	0.07		
S0018	VENT; 401-RM1076	POINT	50739	401778.4	3833728	756	32.00	0.91	299.8	0.10	0.07		
S0019	VENT; 720-GLOBAL HAWK	POINT	50741	399253.3	3831158	776	5.58	0.91	299.8	0.10	0.07		
S0020	VENT; 730-GLOBAL HAWK	POINT	50742	399513.3	3831283	775	5.58	0.91	299.8	0.10	0.07		
S0021	STACK; B301 COOLING TOWER 01	POINT	61201	401018.1	3833341	758	6.10	3.05	288.7	3.05	22.24		
S0022	STACK; B301 COOLING TOWER 01	POINT	61202	401022.6	3833341	758	6.10	3.05	288.7	3.05	22.24		
S0023	STACK; B410 COOLING TOWER 01	POINT	61203	402096.9	3833716	757	6.10	3.05	288.7	3.05	22.24		
S0024	STACK; B410 COOLING TOWER 02	POINT	61204	402100.8	3833717	757	6.10	3.05	288.7	3.05	22.24		
S0025	STACK; B410 COOLING TOWER 03	POINT	61205	402103.9	3833717	757	6.10	3.05	288.7	3.05	22.24		
S0026	STACK; B410 COOLING TOWER 04	POINT	61206	402076.4	3833711	757	6.10	3.05	288.7	3.05	22.24		
S0027	STACK; B410 COOLING TOWER 05	POINT	61207	402078.4	3833711	757	6.10	3.05	288.7	3.05	22.24		
S0028	FDF GASOLINE TANK VENTS	POINT	80901	401458.1	3833922	754	9.75	0.05	299.8	0.10	0.00	0.372	0.186
S0029	FDF DIESEL TANK VENTS	POINT	80903	401458.4	3833922	754	9.75	0.05	299.8	0.10	0.00	0.372	0.186
S0030	FDF SPILLAGE	VOLUME	80904	401467.7	3833932	753	0.61	0.00	255.4	0.00	0.00		
S0031	FDF DISPENSERS	VOLUME	80905	401468.3	3833933	753	0.61	0.00	255.4	0.00	0.00		
S0032	VENT; EMERGENCY STORAGE TANK; 20000 GAL; 905	POINT	80916	402056.9	3833386	758	3.99	0.05	299.8	0.10	0.00		
S0033	STK_EXT_CB_BL_B302_ST3_1	POINT	90101	401232.9	3833498	757	12.50	0.91	505.4	6.62	4.35		
S0034	STK_EXT_CB_BL_B302_ST3_2	POINT	90102	401244.3	3833496	757	12.50	0.91	505.4	8.84	5.81		
S0035	STK_EXT_CB_BL_B302_ST3_3	POINT	90103	401244.4	3833498	757	12.50	0.91	505.4	11.09	7.28		
S0036	STK_EXT_CB_BL_B410_ST4_4	POINT	90107	402040.1	3833728	756	7.62	0.61	505.4	9.54	2.78		
S0037	STK_EXT_CB_BL_B410_ST4_5	POINT	90108	402040.1	3833728	756	7.62	0.40	505.4	22.58	2.78		
S0038	STACK; B401 HEATER MUA #1; B012837	POINT	90111	401799.6	3833773	756	32.31	0.30	299.8	7.24	0.53		
S0039	STACK; B401 HEATER MUA #2; B012838	POINT	90112	401781.3	3833773	756	32.31	0.30	299.8	7.24	0.53		
S0040	STACK; B421 HEATER MUA #5; B012385	POINT	90113	401379.4	3833702	756	15.24	0.30	299.8	5.82	0.42		
S0041	STACK; B421 HEATER MUA #6; B012386	POINT	90114	401408.5	3833664	756	15.24	0.30	299.8	5.82	0.42		
S0042	STACK; B421 HEATER MUA #1; B012795	POINT	90115	401411.5	3833664	756	15.24	0.30	299.8	5.82	0.42		
S0043	STACK; B421 HEATER MUA #2; B012796	POINT	90116	401414.5	3833664	756	15.24	0.30	299.8	5.82	0.42		
S0044	STACK; B421 HEATER MUA #3; B012797	POINT	90117	401417.5	3833664	756	15.24	0.30	299.8	7.24	0.53		
S0045	STACK; B421 HEATER MUA #4; B012798	POINT	90118	401420.5	3833664	756	15.24	0.30	299.8	7.24	0.53		
S0046	STACK; B423 BOILER SYSTEM; B012790	POINT	90119	401467.7	3833498	757	1.52	0.15	922.0	24.13	0.44		

Table 24: Source data used in estimating impacts from operations at the Northrop sites

Source ID	Description	Type	Stack ID	Location (m)			Source Data						
				Easting m	Northing m	Elev m	Height m	Diam m	Temp Deg K	Velocity m/s	Volume m3/s	Sigma Y ft	Sigma Z ft
S0047	STACK; B410 BOILER NO.4; B013909	POINT	90124	402027.2	3833711	757	11.58	0.58	505.4	4.48	1.18		
S0048	STACK; B410 BOILER NO.5; B013910	POINT	90125	402027.2	3833711	757	11.58	0.58	505.4	7.68	2.02		
S0049	S3 B336T SPACE HEATER SOURCE	POINT	90201	400876.3	3833954	755	4.57	0.15	533.2	2.59	0.05		
S0050	S4 B401 LOW BAY SPACE HEATER SOURCE	POINT	90202	401698.9	3833770	756	19.20	0.15	533.2	2.59	0.05		
S0051	S3 SPACE HEATER SOURCE	POINT	90203	401066	3833504	757	6.10	0.15	533.2	2.59	0.05		
S0052	S4 SPACE HEATER SOURCE	POINT	90204	401809.1	3833756	756	6.10	0.15	533.2	2.59	0.05		
S0053	STACK; SPACE HEAT; S3	POINT	90205	398327.3	3831732	780	6.10	0.30	533.2	0.65	0.05		
S0054	STACK; SPACE HEAT; S7	POINT	90206	399526.3	3831417	774	6.10	0.30	533.2	0.65	0.05		
S0055	STACK; SPACE HEAT; S8	POINT	90207	398327.3	3831732	780	6.10	0.30	533.2	0.65	0.05		
S0056	STK_INT_CB_RE_B410_ST4_03	POINT	90401	402051.7	3833711	757	10.36	0.20	549.8	95.07	3.11		
S0057	STK_INT_CB_RE_B307_ST3_01	POINT	90404	400986.4	3833529	757	2.29	0.13	797.0	66.57	0.86		
S0058	STK_INT_CB_RE_B302_ST3_01	POINT	90406	401249.4	3833498	757	2.50	0.10	797.0	112.82	0.90		
S0059	STK_INT_CB_RE_B301_ST3_01	POINT	90410	401002.6	3833340	758	2.29	0.13	797.0	65.98	0.85		
S0060	STK_INT_CB_RE_B401_ST4_01	POINT	90411	401380.2	3833965	755	3.05	0.16	797.0	75.62	1.61		
S0061	STK_INT_CB_RE_PORT_ST4_01	POINT	90414	401908.1	3833924	755	3.05	0.16	797.0	29.05	0.62		
S0062	STACK; EG09-STATIONARY LPG EMER GEN	POINT	90415	401448.8	3834146	753	1.52	0.15	922.0	9.29	0.17		
S0063	STACK; EG18-STATIONARY DF2 EMER GEN	POINT	90416	399253.9	3831190	776	1.52	0.15	922.0	9.29	0.17		
S0064	STACK; EG19-STATIONARY DF2 EMER GEN	POINT	90417	399518.2	3831324	775	1.52	0.15	922.0	9.29	0.17		
S0065	STACK; EG21-STATIONARY DF2 EMER GEN	POINT	90418	399417.2	3831359	775	1.52	0.15	922.0	10.99	0.20		
S0066	STACK; EG22-STATIONARY DF2 EMER GEN	POINT	90419	398484.2	3831688	780	1.52	0.15	922.0	6.03	0.11		
S0067	STACK; EG16-STATIONARY NG EMER GEN	POINT	90420	401998.5	3833719	756	1.52	0.15	922.0	75.94	1.39		
S0068	STACK; EG15-STATIONARY NG EMER GEN	POINT	90421	402000.8	3833787	756	1.52	0.15	922.0	118.57	2.16		
S0069	STACK; EG23-STATIONARY NG EMER GEN	POINT	90422	402024	3833895	756	1.52	0.15	922.0	22.24	0.41		
S0070	STACK; E012299-STATIONARY LPG EMER GEN	POINT	90423	400665.1	3833339	758	1.52	0.15	922.0	22.24	0.41		
S0071	STACK; E012301-STATIONARY LPG EMER GEN	POINT	90425	400669.1	3833339	758	1.52	0.15	922.0	22.24	0.41		
S0072	STACK; E012302-STATIONARY LPG EMER GEN	POINT	90426	400671	3833339	758	1.52	0.15	922.0	22.24	0.41		
S0073	STACK; E012545-STATIONARY LPG	POINT	90427	400693.3	3833613	757	1.52	0.15	922.0	22.24	0.41		
S0074	STACK; E013597-STATIONARY LPG EMER GEN	POINT	90430	399566.3	3831467	774	2.13	0.10	847.0	51.30	0.41		
S0075	STACK; E013598-STATIONARY LPG EMER GEN	POINT	90431	399566.3	3831470	774	2.13	0.10	847.0	51.30	0.41		
S0076	STACK; E013599-STATIONARY LPG EMER GEN	POINT	90432	399566.3	3831473	774	2.13	0.10	847.0	42.66	0.41		
S0077	STACK; B013434-STATIONARY LPG BRIDGE CRANE	POINT	90434	401143.3	3834013	755	6.10	0.10	847.0	42.66	0.19		
S0078	S3 AREA AGE	POINT	90501	401008.3	3833579	757	1.83	0.15	533.2	18.28	0.33		
S0079	S4 AREA AGE	POINT	90502	401932.3	3833533	757	1.83	0.15	533.2	18.28	0.33		
S0080	S3 AREA PROD SUPPORT	POINT	90503	401008.3	3833579	757	1.83	0.15	533.2	18.28	0.33		
S0081	S4 AREA PROD SUPPORT	POINT	90504	401932.3	3833533	757	1.83	0.15	533.2	18.28	0.33		
S0082	B333 DEPAINT HANGAR STACK	POINT	90601	400862.5	3833709	756	22.86	0.91	299.8	12.19	8.01		
S0083	B301-B SPRAY BOOTH S007822 STACK	POINT	90602	400958.2	3833336	758	14.63	0.61	299.8	18.28	5.34		
S0084	B305 SPRAY BOOTH S006874 STACK	POINT	90603	400814.6	3833522	757	13.72	0.61	299.8	18.28	5.34		
S0085	B401-B SPRAY BOOTH, S008093 STACK	POINT	90604	401690.6	3833708	756	19.20	0.61	299.8	18.28	5.34		
S0086	B401 SPRAY BOOTH S007837 STACK	POINT	90605	401709.7	3833691	756	19.20	0.61	299.8	18.28	5.34		
S0087	B401 SPRAY BOOTH S009013 STACK	POINT	90606	401685.7	3833674	757	19.20	0.61	299.8	18.28	5.34		
S0088	B415 PAINT HANGAR S006767 STACK	POINT	90609	402048.7	3833650	757	21.64	3.05	299.8	18.28	133.44		
S0089	STACK; 305-B1 COATING OPERATION	POINT	90610	400818.6	3833522	757	13.72	0.61	294.3	4.01	10.62		
S0090	STACK; 305-B2 COATING OPERATIONS	POINT	90611	400822.6	3833522	757	13.72	0.61	294.3	4.01	10.62		
S0091	STACK; 305-B3 COATING OPERATIONS	POINT	90612	400830.6	3833522	757	13.72	0.61	294.3	4.01	10.62		
S0092	STACK; 305-B4 COATING OPERATIONS	POINT	90613	400826.6	3833522	757	13.72	0.61	294.3	4.01	10.62		

Table 24: Source data used in estimating impacts from operations at the Northrop sites

Source ID	Description	Type	Stack ID	Location (m)			Source Data						
				Easting m	Northing m	Elev m	Height m	Diam m	Temp Deg K	Velocity m/s	Volume m3/s	Sigma Y ft	Sigma Z ft
S0093	STACK; 421-B1 COATING OPERATIONS	POINT	90614	401379.4	3833702	756	13.41	1.22	294.3	9.09	10.62		
S0094	STACK; 421-B3 COATING OPERATIONS	POINT	90615	401408.5	3833664	756	12.50	1.22	294.3	9.09	10.62		
S0095	STACK; 421 PAINT HANGAR 1	POINT	90616	401438.3	3833664	756	18.29	1.22	294.3	90.93	106.19		
S0096	STK_IN_CB_RE_B301_S3_R1	POINT	91601	401014.4	3833339	758	1.52	0.20	549.8	1.37	0.04		
S0097	STK_IN_CB_RE_B302_S3_R1	POINT	91602	401231.3	3833491	757	1.52	0.20	549.8	1.37	0.04		
S0098	STK_IN_CB_RE_B304_S3_R1	POINT	91603	400826.3	3833833	756	1.52	0.20	549.8	1.37	0.04		
S0099	STK_IN_CB_RE_B305_S3_R1	POINT	91604	401234.4	3833766	756	1.52	0.20	549.8	1.37	0.04		
S0100	STK_IN_CB_RE_B307_S3_R1	POINT	91605	401045.3	3833547	757	1.52	0.20	549.8	1.37	0.04		
S0101	STK_IN_CB_RE_B308_S3_R1	POINT	91606	401233.4	3833756	756	1.52	0.20	549.8	1.37	0.04		
S0102	STK_IN_CB_RE_B360_S3_R1	POINT	91608	400661.4	3833349	758	1.52	0.20	549.8	1.37	0.04		
S0103	STK_IN_CB_RE_B410_S3_R1	POINT	91610	402076.3	3833707	757	1.52	0.20	549.8	1.37	0.04		
S0104	STK_IN_CB_RE_B423_S3_R1	POINT	91611	401417.3	3833530	757	1.52	0.20	549.8	1.37	0.04		
S0105	STK_IN_CB_RE_B459T_S3_R1	POINT	91612	401381.3	3833977	755	1.52	0.20	549.8	1.37	0.04		

Table 25: Structure data used to estimate building downwash

Site	Structure	Section	Height	
			ft	m
3	B301	TIER 1	14.00	4.27
		TIER 2	38.00	11.58
		TIER 3	65.00	19.81
		TIER 4	68.00	20.73
	B302/310	TIER 1	14.00	4.27
		TIER 2	32.00	9.75
	B304	TIER 1	18.00	5.49
	B305	TIER 1	16.00	4.88
		TIER 2	42.00	12.80
	B306	TIER 1	23.00	7.01
	B307	TIER 1	65.00	19.81
		TIER 2	67.00	20.42
	B308	TIER 1	12.00	3.66
		TIER 2	28.00	8.53
	B311	TIER 1	14.00	4.27
	B312	TIER 1	14.00	4.27
	B313	TIER 1	14.00	4.27
	B314	TIER 1	14.00	4.27
	B315	TIER 1	18.00	5.49
	B317	TIER 1	14.00	4.27
	B318	TIER 1	12.00	3.66
	B321	TIER 1	14.00	4.27
	B322	TIER 1	14.00	4.27
	B324	TIER 1	14.00	4.27
	B326	TIER 1	14.00	4.27
	B332	TIER 1	12.00	3.66
	B333	TIER 1	72.00	21.95
	B335T	TIER 1	14.00	4.27
	B336T	TIER 1	12.00	3.66
	B337T	TIER 1	12.00	3.66
	B338	TIER 1	14.00	4.27
	EAST HUSH HOUSE	TIER 1	30.00	9.14
	WEST HUSH HOUSE	TIER 1	30.00	9.14
4	B401	TIER 1	60.00	18.29
		TIER 2	100.00	30.48
	B405	TIER 1	22.00	6.71
	B407	TIER 1	14.00	4.27
	B408	TIER 1	14.00	4.27
	B410	TIER 1	32.00	9.75
	B412	TIER 1	18.00	5.49
	B415	TIER 1	66.00	20.12
	B430	TIER 1	30.00	9.14
		TIER 2	65.00	19.81
	B431	TIER 1	17.00	5.18
	B435	TIER 1	28.00	8.53
		TIER 2	73.00	22.25
	B450	TIER 1	14.00	4.27
	B460	TIER 1	22.00	6.71
		TIER 2	30.00	9.14
	B462	TIER 1	21.00	6.40
	B464	TIER 1	21.00	6.40
	B466	TIER 1	18.00	5.49
	B468	TIER 1	18.00	5.49
	B485T	TIER 1	14.00	4.27
	COOLING TOWER	TIER 1	21.00	6.40
	NP 1	TIER 1	14.00	4.27
	B422	TIER 1	50.00	15.24
	B423	TIER 1	50.00	15.24
	B421	TIER 1	32.97	10.05
	B421 Hangar 1	TIER 1	52.00	15.83
	B421 Hangar 2	TIER 1	50.00	15.24

Table 25: Structure data used to estimate building downwash

Site	Structure	Section	Height	
			ft	m
4	B421 Hangar 2	TIER 2	20.00	6.096
	Boiler Plant	TIER 1	12.00	3.658
7	B/720	TIER 1	60.04	18.30
	B/721	TIER 1	23.95	7.30
	B/722	TIER 1	29.86	9.10
	B/723	TIER 1	12.14	3.70
	B/725	TIER 1	23.95	7.30
	B/726	TIER 1	20.01	6.10
	B/727	TIER 1	29.86	9.10
	B/728	TIER 1	13.12	4.00
	B/729	TIER 1	23.95	7.30
	B/730	TIER 1	60.04	18.30
	B/731	TIER 1	24.93	7.60
	B/732	TIER 1	21.98	6.70
	B/740	TIER 1	44.95	13.70
	B/742	TIER 1	23.95	7.30
	B/750	TIER 1	25.00	7.62
	B/751	TIER 1	25.00	7.62
	B/752	TIER 1	25.00	7.62
	B/753	TIER 1	24.00	7.30
	B/756	TIER 1	20.00	6.10
	B/757	TIER 1	12.00	3.70
	B/757T	TIER 1	12.00	3.70
	B/762	TIER 1	30.00	9.10
	B/763	TIER 1	30.00	9.10
	B/780	TIER 1	15.00	4.57
8	B/870	TIER 1	30.00	9.10
	B/871	TIER 1	60.00	18.30

Table 26: Excess cancer risk associated with emissions from the permit action alone and in conjunction with new and existing operations

Type	Rec ID	Easting m	Northing m	Scenario	Sources	Excess Cancer Risk	
							per million
MEIR	4296	403394	3834342	30 Year, OEHHA Derived	Permit Action	2.0E-07	0.20
					2022 CEIR Sources	5.3E-06	5.32
					All	5.5E-06	5.52
				70 Year, OEHHA Derived	Permit Action	2.3E-07	0.23
					2022 CEIR Sources	6.3E-06	6.30
					All	6.5E-06	6.53
				9 Year, OEHHA Derived	Permit Action	1.6E-07	0.16
					2022 CEIR Sources	3.7E-06	3.73
					All	3.9E-06	3.89
MEIW	2013	403000	3834400	25 Year (Worker), OEHHA Derrived	Permit Action	1.7E-08	0.02
					2022 CEIR Sources	5.6E-07	0.56
					All	5.7E-07	0.57
PMI	8072	402154.8	3834299	30 Year, OEHHA Derived	Permit Action	6.6E-07	0.66
					2022 CEIR Sources	1.7E-05	17.43
					All	1.81E-05	18.09

Table 27: Contribution of chemicals emitted from all sources after the permit action to excess cancer risk at the MEIR

Receptor 4296, All Sources

CAS	Chemical	GLC ug/m3	Excess Cancer Risk by Pathway						% of Total
			Inhal	Derm	Soil	Mother	Crop	Total	
9901	DieselExhPM	4.26E-03	3.8E-06	0.0E+00	0.0E+00	0.0E+00	0.0E+00	3.8E-06	68.17
18540299	Cr(VI)	1.78E-06	7.3E-07	3.5E-10	2.6E-08	0.0E+00	0.0E+00	7.5E-07	13.66
98566	PCBTF	1.07E-02	2.6E-07	0.0E+00	0.0E+00	0.0E+00	0.0E+00	2.6E-07	4.68
7440382	Arsenic	2.81E-06	2.7E-08	4.9E-09	1.2E-07	0.0E+00	0.0E+00	1.5E-07	2.78
7789062	StrontiumChrom	3.53E-07	1.4E-07	6.9E-11	5.1E-09	0.0E+00	0.0E+00	1.5E-07	2.71
71432	Benzene	1.39E-03	1.1E-07	0.0E+00	0.0E+00	0.0E+00	0.0E+00	1.1E-07	2.02
106990	1,3-Butadiene	2.15E-04	1.0E-07	0.0E+00	0.0E+00	0.0E+00	0.0E+00	1.0E-07	1.88
7440439	Cadmium	6.93E-06	8.4E-08	0.0E+00	0.0E+00	0.0E+00	0.0E+00	8.4E-08	1.51
57976	7,12-DB[a]anthr	6.33E-08	7.7E-09	1.9E-09	2.2E-08	1.3E-08	0.0E+00	4.5E-08	0.81
50000	Formaldehyde	2.04E-03	3.4E-08	0.0E+00	0.0E+00	0.0E+00	0.0E+00	3.4E-08	0.62
100414	Ethyl Benzene	2.26E-03	1.6E-08	0.0E+00	0.0E+00	0.0E+00	0.0E+00	1.6E-08	0.29
10294403	Barium Chromate	3.68E-08	1.5E-08	7.2E-12	5.3E-10	0.0E+00	0.0E+00	1.6E-08	0.28
7440484	Cobalt	5.06E-07	1.1E-08	0.0E+00	0.0E+00	0.0E+00	0.0E+00	1.1E-08	0.20
7440020	Nickel	1.38E-05	1.0E-08	0.0E+00	0.0E+00	0.0E+00	0.0E+00	1.0E-08	0.18
91203	Naphthalene	4.92E-05	4.7E-09	0.0E+00	0.0E+00	0.0E+00	0.0E+00	4.7E-09	0.09
7439921	Lead	4.72E-06	1.6E-10	2.4E-11	1.2E-09	1.4E-11	0.0E+00	1.4E-09	0.02
75070	Acetaldehyde	1.20E-04	9.7E-10	0.0E+00	0.0E+00	0.0E+00	0.0E+00	9.7E-10	0.02
1634044	Me t-ButylEther	5.95E-04	8.6E-10	0.0E+00	0.0E+00	0.0E+00	0.0E+00	8.6E-10	0.02
540885	t-Butyl acetate	2.21E-04	8.4E-10	0.0E+00	0.0E+00	0.0E+00	0.0E+00	8.4E-10	0.02
7440417	Beryllium	7.22E-08	4.9E-10	0.0E+00	0.0E+00	0.0E+00	0.0E+00	4.9E-10	0.01
56495	3-MeCholanthren	7.13E-09	7.7E-11	1.9E-11	2.1E-10	1.3E-10	0.0E+00	4.4E-10	0.01
67663	Chloroform	2.38E-05	3.6E-10	0.0E+00	0.0E+00	0.0E+00	0.0E+00	3.6E-10	0.01
106934	EDB	1.20E-06	2.4E-10	0.0E+00	0.0E+00	0.0E+00	0.0E+00	2.4E-10	0.00
50328	B[a]P	6.33E-09	1.2E-11	9.2E-12	1.0E-10	6.4E-11	0.0E+00	1.9E-10	0.00
207089	B[k]fluoranthen	6.09E-08	1.2E-11	8.8E-12	1.0E-10	6.2E-11	0.0E+00	1.8E-10	0.00
53703	D[a,h]anthracen	9.63E-09	1.9E-11	4.8E-12	5.4E-11	3.3E-11	0.0E+00	1.1E-10	0.00
79345	TetraClEthane	4.48E-07	7.2E-11	0.0E+00	0.0E+00	0.0E+00	0.0E+00	7.2E-11	0.00
56235	CCl4	5.21E-07	6.3E-11	0.0E+00	0.0E+00	0.0E+00	0.0E+00	6.3E-11	0.00
205992	B[b]fluoranthen	1.77E-08	3.4E-12	2.6E-12	2.9E-11	1.8E-11	0.0E+00	5.3E-11	0.00
75014	Vinyl Chloride	1.38E-07	3.0E-11	0.0E+00	0.0E+00	0.0E+00	0.0E+00	3.0E-11	0.00
56553	B[a]anthracene	7.13E-09	1.4E-12	1.0E-12	1.2E-11	7.2E-12	0.0E+00	2.1E-11	0.00
205823	B[j]fluoranthen	7.13E-09	1.4E-12	1.0E-12	1.2E-11	7.2E-12	0.0E+00	2.1E-11	0.00
193395	In[1,2,3-cd]pyr	7.13E-09	1.4E-12	1.0E-12	1.2E-11	7.2E-12	0.0E+00	2.1E-11	0.00
79005	1,1,2TriClEthan	2.71E-07	1.2E-11	0.0E+00	0.0E+00	0.0E+00	0.0E+00	1.2E-11	0.00
107062	EDC	2.11E-07	1.2E-11	0.0E+00	0.0E+00	0.0E+00	0.0E+00	1.2E-11	0.00
218019	Chrysene	1.03E-08	2.0E-13	1.5E-13	1.7E-12	1.0E-12	0.0E+00	3.1E-12	0.00
584849	T-2,4-diisocyan	4.93E-08	1.5E-12	0.0E+00	0.0E+00	0.0E+00	0.0E+00	1.5E-12	0.00
75343	1,1-DiClEthane	2.00E-07	9.2E-13	0.0E+00	0.0E+00	0.0E+00	0.0E+00	9.2E-13	0.00
26471625	TolueneDiisocyn	1.11E-08	3.5E-13	0.0E+00	0.0E+00	0.0E+00	0.0E+00	3.5E-13	0.00
75092	Methylene Chlor	1.01E-08	2.8E-14	0.0E+00	0.0E+00	0.0E+00	0.0E+00	2.8E-14	0.00
Total			5.3E-06	7.3E-09	1.8E-07	1.4E-08	0.0E+00	5.5E-06	100.00

Table 28: Contribution of chemicals emitted from equipment in the permit action to excess cancer risk at the MEIR

Receptor 4296, Permit Action Sources

CAS	Chemical	GLC ug/m3	Excess Cancer Risk by Pathway					% of Total
			Inhal	Derm	Soil	Mother	Total	
7440439	Cadmium	4.36E-06	5.3E-08	0.0E+00	0.0E+00	0.0E+00	5.3E-08	26.54
57976	7,12-DB[a]anthr	6.33E-08	7.7E-09	1.9E-09	2.2E-08	1.3E-08	4.5E-08	22.55
7440382	Arsenic	7.92E-07	7.6E-09	1.4E-09	3.4E-08	0.0E+00	4.3E-08	21.85
7789062	StrontiumChrom	3.91E-08	1.6E-08	7.6E-12	5.6E-10	0.0E+00	1.7E-08	8.39
98566	PCBTF	6.68E-04	1.6E-08	0.0E+00	0.0E+00	0.0E+00	1.6E-08	8.14
7440484	Cobalt	3.33E-07	7.2E-09	0.0E+00	0.0E+00	0.0E+00	7.2E-09	3.65
7440020	Nickel	8.31E-06	6.1E-09	0.0E+00	0.0E+00	0.0E+00	6.1E-09	3.07
71432	Benzene	3.50E-05	2.8E-09	0.0E+00	0.0E+00	0.0E+00	2.8E-09	1.42
50000	Formaldehyde	1.33E-04	2.2E-09	0.0E+00	0.0E+00	0.0E+00	2.2E-09	1.13
100414	Ethyl Benzene	2.50E-04	1.8E-09	0.0E+00	0.0E+00	0.0E+00	1.8E-09	0.88
10294403	Barium Chromate	3.06E-09	1.3E-09	6.0E-13	4.4E-11	0.0E+00	1.3E-09	0.66
7439921	Lead	1.98E-06	6.7E-11	9.9E-12	4.8E-10	5.8E-12	5.7E-10	0.29
106990	1,3-Butadiene	1.16E-06	5.6E-10	0.0E+00	0.0E+00	0.0E+00	5.6E-10	0.28
56495	3-MeCholanthren	7.13E-09	7.7E-11	1.9E-11	2.1E-10	1.3E-10	4.4E-10	0.22
67663	Chloroform	2.36E-05	3.6E-10	0.0E+00	0.0E+00	0.0E+00	3.6E-10	0.18
7440417	Beryllium	4.75E-08	3.2E-10	0.0E+00	0.0E+00	0.0E+00	3.2E-10	0.16
50328	B[a]P	6.33E-09	1.2E-11	9.2E-12	1.0E-10	6.4E-11	1.9E-10	0.10
207089	B[k]fluoranthen	6.09E-08	1.2E-11	8.8E-12	1.0E-10	6.2E-11	1.8E-10	0.09
75070	Acetaldehyde	2.18E-05	1.8E-10	0.0E+00	0.0E+00	0.0E+00	1.8E-10	0.09
106934	EDB	8.60E-07	1.7E-10	0.0E+00	0.0E+00	0.0E+00	1.7E-10	0.09
91203	Naphthalene	1.50E-06	1.4E-10	0.0E+00	0.0E+00	0.0E+00	1.4E-10	0.07
53703	D[a,h]anthracen	6.33E-09	1.3E-11	3.1E-12	3.5E-11	2.2E-11	7.3E-11	0.04
205992	B[b]fluoranthen	1.77E-08	3.4E-12	2.6E-12	2.9E-11	1.8E-11	5.3E-11	0.03
540885	t-Butyl acetate	1.07E-05	4.0E-11	0.0E+00	0.0E+00	0.0E+00	4.0E-11	0.02
56235	CCl4	2.38E-07	2.9E-11	0.0E+00	0.0E+00	0.0E+00	2.9E-11	0.01
56553	B[a]anthracene	7.13E-09	1.4E-12	1.0E-12	1.2E-11	7.2E-12	2.1E-11	0.01
205823	B[j]fluoranthen	7.13E-09	1.4E-12	1.0E-12	1.2E-11	7.2E-12	2.1E-11	0.01
193395	In[1,2,3-cd]pyr	7.13E-09	1.4E-12	1.0E-12	1.2E-11	7.2E-12	2.1E-11	0.01
79345	TetraClEthane	4.38E-08	7.0E-12	0.0E+00	0.0E+00	0.0E+00	7.0E-12	0.00
75014	Vinyl Chloride	2.30E-08	5.0E-12	0.0E+00	0.0E+00	0.0E+00	5.0E-12	0.00
218019	Chrysene	1.03E-08	2.0E-13	1.5E-13	1.7E-12	1.0E-12	3.1E-12	0.00
107062	EDC	3.01E-08	1.7E-12	0.0E+00	0.0E+00	0.0E+00	1.7E-12	0.00
79005	1,1,2TriClEthan	2.67E-08	1.2E-12	0.0E+00	0.0E+00	0.0E+00	1.2E-12	0.00
75343	1,1-DiClEthane	1.99E-08	9.1E-14	0.0E+00	0.0E+00	0.0E+00	9.1E-14	0.00
584849	T-2,4-diisocyan	4.05E-13	1.3E-17	0.0E+00	0.0E+00	0.0E+00	1.3E-17	0.00
Total			1.2E-07	3.4E-09	5.7E-08	1.4E-08	2.0E-07	100.00

Table 29: Contribution of chemicals emitted from all sources after the permit action to excess cancer risk at the MEIW

Receptor 2013, All Sources

CAS	Chemical	GLC ug/m3	Excess Cancer Risk by Pathway						% of Total
			Inhal	Derm	Soil	Mother	Crop	Total	
9901	DieselExhPM	6.53E-03	4.0E-07	0.0E+00	0.0E+00	0.0E+00	0.0E+00	4.0E-07	70.548
18540299	Cr(VI)	2.45E-06	7.0E-08	1.0E-10	1.5E-09	0.0E+00	0.0E+00	7.2E-08	12.558
98566	PCBTF	1.46E-02	2.5E-08	0.0E+00	0.0E+00	0.0E+00	0.0E+00	2.5E-08	4.306
7789062	StrontiumChrom	6.02E-07	1.7E-08	2.5E-11	3.7E-10	0.0E+00	0.0E+00	1.8E-08	3.083
7440382	Arsenic	3.71E-06	1.8E-09	2.7E-09	6.8E-09	0.0E+00	0.0E+00	1.1E-08	1.974
71432	Benzene	1.98E-03	1.1E-08	0.0E+00	0.0E+00	0.0E+00	0.0E+00	1.1E-08	1.949
106990	1,3-Butadiene	3.23E-04	1.1E-08	0.0E+00	0.0E+00	0.0E+00	0.0E+00	1.1E-08	1.902
7440439	Cadmium	9.58E-06	8.1E-09	0.0E+00	0.0E+00	0.0E+00	0.0E+00	8.1E-09	1.411
50000	Formaldehyde	2.82E-03	3.3E-09	0.0E+00	0.0E+00	0.0E+00	0.0E+00	3.3E-09	0.581
57976	7,12-DB[a]anthr	8.88E-08	1.2E-09	5.8E-10	1.3E-09	0.0E+00	0.0E+00	3.1E-09	0.542
10294403	Barium Chromate	6.32E-08	1.8E-09	2.7E-12	3.8E-11	0.0E+00	0.0E+00	1.9E-09	0.324
100414	Ethyl Benzene	3.34E-03	1.6E-09	0.0E+00	0.0E+00	0.0E+00	0.0E+00	1.6E-09	0.286
7440484	Cobalt	7.01E-07	1.1E-09	0.0E+00	0.0E+00	0.0E+00	0.0E+00	1.1E-09	0.186
7440020	Nickel	1.91E-05	9.8E-10	0.0E+00	0.0E+00	0.0E+00	0.0E+00	9.8E-10	0.171
91203	Naphthalene	7.00E-05	4.7E-10	0.0E+00	0.0E+00	0.0E+00	0.0E+00	4.7E-10	0.083
75070	Acetaldehyde	1.65E-04	9.3E-11	0.0E+00	0.0E+00	0.0E+00	0.0E+00	9.3E-11	0.016
1634044	Me t-ButylEther	8.93E-04	9.0E-11	0.0E+00	0.0E+00	0.0E+00	0.0E+00	9.0E-11	0.016
7439921	Lead	6.34E-06	1.5E-11	6.8E-12	6.6E-11	0.0E+00	0.0E+00	8.7E-11	0.015
540885	t-Butyl acetate	2.94E-04	7.8E-11	0.0E+00	0.0E+00	0.0E+00	0.0E+00	7.8E-11	0.014
7440417	Beryllium	1.00E-07	4.7E-11	0.0E+00	0.0E+00	0.0E+00	0.0E+00	4.7E-11	0.008
67663	Chloroform	3.98E-05	4.3E-11	0.0E+00	0.0E+00	0.0E+00	0.0E+00	4.3E-11	0.007
56495	3-MeCholanthren	9.99E-09	1.2E-11	5.7E-12	1.3E-11	0.0E+00	0.0E+00	3.1E-11	0.005
106934	EDB	1.93E-06	2.7E-11	0.0E+00	0.0E+00	0.0E+00	0.0E+00	2.7E-11	0.005
207089	B[k]fluoranthen	1.02E-07	1.6E-12	6.1E-12	7.0E-12	0.0E+00	0.0E+00	1.5E-11	0.003
50328	B[a]P	8.88E-09	1.4E-12	5.3E-12	6.1E-12	0.0E+00	0.0E+00	1.3E-11	0.002
53703	D[a,h]anthracen	1.34E-08	3.1E-12	1.4E-12	3.2E-12	0.0E+00	0.0E+00	7.7E-12	0.001
79345	TetraClEthane	6.65E-07	7.5E-12	0.0E+00	0.0E+00	0.0E+00	0.0E+00	7.5E-12	0.001
56235	CCl4	8.12E-07	6.9E-12	0.0E+00	0.0E+00	0.0E+00	0.0E+00	6.9E-12	0.001
205992	B[b]fluoranthen	2.76E-08	4.5E-13	1.7E-12	1.9E-12	0.0E+00	0.0E+00	4.0E-12	0.001
75014	Vinyl Chloride	2.06E-07	3.1E-12	0.0E+00	0.0E+00	0.0E+00	0.0E+00	3.1E-12	0.001
56553	B[a]anthracene	9.99E-09	1.6E-13	6.0E-13	6.9E-13	0.0E+00	0.0E+00	1.5E-12	0.000
205823	B[j]fluoranthen	9.99E-09	1.6E-13	6.0E-13	6.9E-13	0.0E+00	0.0E+00	1.5E-12	0.000
193395	In[1,2,3-cd]pyr	9.99E-09	1.6E-13	6.0E-13	6.9E-13	0.0E+00	0.0E+00	1.5E-12	0.000
79005	1,1,2TriClEthan	4.02E-07	1.3E-12	0.0E+00	0.0E+00	0.0E+00	0.0E+00	1.3E-12	0.000
107062	EDC	3.15E-07	1.3E-12	0.0E+00	0.0E+00	0.0E+00	0.0E+00	1.3E-12	0.000
218019	Chrysene	1.51E-08	2.5E-14	9.1E-14	1.0E-13	0.0E+00	0.0E+00	2.2E-13	0.000
584849	T-2,4-diisocyan	7.58E-08	1.7E-13	0.0E+00	0.0E+00	0.0E+00	0.0E+00	1.7E-13	0.000
75343	1,1-DiClEthane	2.97E-07	9.5E-14	0.0E+00	0.0E+00	0.0E+00	0.0E+00	9.5E-14	0.000
26471625	ToluneneDiisocyn	1.84E-08	4.0E-14	0.0E+00	0.0E+00	0.0E+00	0.0E+00	4.0E-14	0.000
Total			5.6E-07	3.4E-09	1.0E-08	0.0E+00	0.0E+00	5.7E-07	100.000

Table 30: Contribution of chemicals emitted from permit action operations to excess cancer risk at the MEIW

Receptor 2013, Permit Action Sources

CAS	Chemical	GLC ug/m3	Excess Cancer Risk by Pathway						% of Total
			Inhal	Derm	Soil	Mother	Crop	Total	
7440439	Cadmium	6.10E-06	5.2E-09	0.0E+00	0.0E+00	0.0E+00	0.0E+00	5.2E-09	29.698
7440382	Arsenic	1.11E-06	5.5E-10	8.1E-10	2.0E-09	0.0E+00	0.0E+00	3.4E-09	19.521
57976	7,12-DB[a]anthr	8.88E-08	1.2E-09	5.8E-10	1.3E-09	0.0E+00	0.0E+00	3.1E-09	17.891
98566	PCBTF	1.00E-03	1.7E-09	0.0E+00	0.0E+00	0.0E+00	0.0E+00	1.7E-09	9.735
7789062	StrontiumChrom	5.47E-08	1.6E-09	2.3E-12	3.3E-11	0.0E+00	0.0E+00	1.6E-09	9.255
7440484	Cobalt	4.66E-07	7.1E-10	0.0E+00	0.0E+00	0.0E+00	0.0E+00	7.1E-10	4.082
7440020	Nickel	1.17E-05	6.0E-10	0.0E+00	0.0E+00	0.0E+00	0.0E+00	6.0E-10	3.440
71432	Benzene	4.88E-05	2.7E-10	0.0E+00	0.0E+00	0.0E+00	0.0E+00	2.7E-10	1.583
50000	Formaldehyde	1.92E-04	2.3E-10	0.0E+00	0.0E+00	0.0E+00	0.0E+00	2.3E-10	1.309
100414	Ethyl Benzene	3.71E-04	1.8E-10	0.0E+00	0.0E+00	0.0E+00	0.0E+00	1.8E-10	1.048
10294403	Barium Chromate	4.28E-09	1.2E-10	1.8E-13	2.6E-12	0.0E+00	0.0E+00	1.3E-10	0.724
106990	1,3-Butadiene	1.56E-06	5.3E-11	0.0E+00	0.0E+00	0.0E+00	0.0E+00	5.3E-11	0.304
67663	Chloroform	3.94E-05	4.2E-11	0.0E+00	0.0E+00	0.0E+00	0.0E+00	4.2E-11	0.243
7439921	Lead	2.77E-06	6.6E-12	3.0E-12	2.9E-11	0.0E+00	0.0E+00	3.8E-11	0.220
7440417	Beryllium	6.66E-08	3.1E-11	0.0E+00	0.0E+00	0.0E+00	0.0E+00	3.1E-11	0.181
56495	3-MeCholanthren	9.99E-09	1.2E-11	5.7E-12	1.3E-11	0.0E+00	0.0E+00	3.1E-11	0.177
106934	EDB	1.42E-06	2.0E-11	0.0E+00	0.0E+00	0.0E+00	0.0E+00	2.0E-11	0.115
75070	Acetaldehyde	3.03E-05	1.7E-11	0.0E+00	0.0E+00	0.0E+00	0.0E+00	1.7E-11	0.098
207089	B[k]fluoranthen	1.02E-07	1.6E-12	6.1E-12	7.0E-12	0.0E+00	0.0E+00	1.5E-11	0.085
91203	Naphthalene	2.13E-06	1.4E-11	0.0E+00	0.0E+00	0.0E+00	0.0E+00	1.4E-11	0.083
50328	B[a]P	8.88E-09	1.4E-12	5.3E-12	6.1E-12	0.0E+00	0.0E+00	1.3E-11	0.074
53703	D[a,h]anthracen	8.88E-09	2.0E-12	9.4E-13	2.1E-12	0.0E+00	0.0E+00	5.1E-12	0.029
540885	t-Butyl acetate	1.61E-05	4.2E-12	0.0E+00	0.0E+00	0.0E+00	0.0E+00	4.2E-12	0.024
205992	B[b]fluoranthen	2.76E-08	4.5E-13	1.7E-12	1.9E-12	0.0E+00	0.0E+00	4.0E-12	0.023
56235	CCl4	3.88E-07	3.3E-12	0.0E+00	0.0E+00	0.0E+00	0.0E+00	3.3E-12	0.019
56553	B[a]anthracene	9.99E-09	1.6E-13	6.0E-13	6.9E-13	0.0E+00	0.0E+00	1.5E-12	0.008
205823	B[j]fluoranthen	9.99E-09	1.6E-13	6.0E-13	6.9E-13	0.0E+00	0.0E+00	1.5E-12	0.008
193395	In[1,2,3-cd]pyr	9.99E-09	1.6E-13	6.0E-13	6.9E-13	0.0E+00	0.0E+00	1.5E-12	0.008
79345	TetraClEthane	5.87E-08	6.6E-13	0.0E+00	0.0E+00	0.0E+00	0.0E+00	6.6E-13	0.004
75014	Vinyl Chloride	3.43E-08	5.2E-13	0.0E+00	0.0E+00	0.0E+00	0.0E+00	5.2E-13	0.003
218019	Chrysene	1.51E-08	2.5E-14	9.1E-14	1.0E-13	0.0E+00	0.0E+00	2.2E-13	0.001
107062	EDC	4.38E-08	1.8E-13	0.0E+00	0.0E+00	0.0E+00	0.0E+00	1.8E-13	0.001
79005	1,1,2TriClEthan	3.58E-08	1.1E-13	0.0E+00	0.0E+00	0.0E+00	0.0E+00	1.1E-13	0.001
75343	1,1-DiClEthane	2.67E-08	8.6E-15	0.0E+00	0.0E+00	0.0E+00	0.0E+00	8.6E-15	0.000
584849	T-2,4-diisocyan	5.96E-13	1.3E-18	0.0E+00	0.0E+00	0.0E+00	0.0E+00	1.3E-18	0.000
Total			1.3E-08	1.4E-09	3.4E-09	0.0E+00	0.0E+00	1.7E-08	100.000

Table 31: Contribution by chemical to excess cancer risk from all sources at the PMI

Receptor 8072, All Sources

CAS	Chemical	GLC ug/m3	Excess Cancer Risk by Pathway						% of Total
			Inhal	Derm	Soil	Mother	Crop	Total	
9901	DieselExhPM	1.54E-02	1.4E-05	0.0E+00	0.0E+00	0.0E+00	0.0E+00	1.4E-05	75.186
18540299	Cr(VI)	3.47E-06	1.4E-06	6.8E-10	5.0E-08	0.0E+00	0.0E+00	1.5E-06	8.151
98566	PCBTF	3.72E-02	9.0E-07	0.0E+00	0.0E+00	0.0E+00	0.0E+00	9.0E-07	4.965
7440382	Arsenic	7.08E-06	6.8E-08	1.2E-08	3.1E-07	0.0E+00	0.0E+00	3.9E-07	2.138
71432	Benzene	4.72E-03	3.8E-07	0.0E+00	0.0E+00	0.0E+00	0.0E+00	3.8E-07	2.096
106990	1,3-Butadiene	7.41E-04	3.6E-07	0.0E+00	0.0E+00	0.0E+00	0.0E+00	3.6E-07	1.975
7789062	StrontiumChrom	6.71E-07	2.7E-07	1.3E-10	9.7E-09	0.0E+00	0.0E+00	2.8E-07	1.575
7440439	Cadmium	2.25E-05	2.7E-07	0.0E+00	0.0E+00	0.0E+00	0.0E+00	2.7E-07	1.498
57976	7,12-DB[a]anthr	2.00E-07	2.4E-08	6.0E-09	6.8E-08	4.2E-08	0.0E+00	1.4E-07	0.778
50000	Formaldehyde	6.51E-03	1.1E-07	0.0E+00	0.0E+00	0.0E+00	0.0E+00	1.1E-07	0.608
100414	Ethyl Benzene	7.79E-03	5.4E-08	0.0E+00	0.0E+00	0.0E+00	0.0E+00	5.4E-08	0.301
7440484	Cobalt	1.67E-06	3.6E-08	0.0E+00	0.0E+00	0.0E+00	0.0E+00	3.6E-08	0.200
7440020	Nickel	4.46E-05	3.3E-08	0.0E+00	0.0E+00	0.0E+00	0.0E+00	3.3E-08	0.181
10294403	Barium Chromate	6.73E-08	2.8E-08	1.3E-11	9.7E-10	0.0E+00	0.0E+00	2.9E-08	0.158
91203	Naphthalene	1.53E-04	1.5E-08	0.0E+00	0.0E+00	0.0E+00	0.0E+00	1.5E-08	0.082
7439921	Lead	1.32E-05	4.5E-10	6.6E-11	3.2E-09	3.9E-11	0.0E+00	3.8E-09	0.021
1634044	Me t-ButylEther	2.36E-03	3.4E-09	0.0E+00	0.0E+00	0.0E+00	0.0E+00	3.4E-09	0.019
75070	Acetaldehyde	3.48E-04	2.8E-09	0.0E+00	0.0E+00	0.0E+00	0.0E+00	2.8E-09	0.015
540885	t-Butyl acetate	5.33E-04	2.0E-09	0.0E+00	0.0E+00	0.0E+00	0.0E+00	2.0E-09	0.011
7440417	Beryllium	2.39E-07	1.6E-09	0.0E+00	0.0E+00	0.0E+00	0.0E+00	1.6E-09	0.009
56495	3-MeCholanthren	2.25E-08	2.4E-10	6.0E-11	6.7E-10	4.2E-10	0.0E+00	1.4E-09	0.008
67663	Chloroform	7.76E-05	1.2E-09	0.0E+00	0.0E+00	0.0E+00	0.0E+00	1.2E-09	0.007
106934	EDB	3.96E-06	8.0E-10	0.0E+00	0.0E+00	0.0E+00	0.0E+00	8.0E-10	0.004
50328	B[a]P	2.00E-08	3.8E-11	2.9E-11	3.3E-10	2.0E-10	0.0E+00	6.0E-10	0.003
207089	B[k]fluoranthen	1.98E-07	3.8E-11	2.9E-11	3.2E-10	2.0E-10	0.0E+00	5.9E-10	0.003
53703	D[a,h]anthracen	3.18E-08	6.4E-11	1.6E-11	1.8E-10	1.1E-10	0.0E+00	3.7E-10	0.002
79345	TetraClEthane	1.53E-06	2.5E-10	0.0E+00	0.0E+00	0.0E+00	0.0E+00	2.5E-10	0.001
56235	CCl4	1.74E-06	2.1E-10	0.0E+00	0.0E+00	0.0E+00	0.0E+00	2.1E-10	0.001
205992	B[b]fluoranthen	5.69E-08	1.1E-11	8.2E-12	9.3E-11	5.8E-11	0.0E+00	1.7E-10	0.001
75014	Vinyl Chloride	4.68E-07	1.0E-10	0.0E+00	0.0E+00	0.0E+00	0.0E+00	1.0E-10	0.001
56553	B[a]anthracene	2.25E-08	4.3E-12	3.2E-12	3.7E-11	2.3E-11	0.0E+00	6.7E-11	0.000
205823	B[j]fluoranthen	2.25E-08	4.3E-12	3.2E-12	3.7E-11	2.3E-11	0.0E+00	6.7E-11	0.000
193395	In[1,2,3-cd]pyr	2.25E-08	4.3E-12	3.2E-12	3.7E-11	2.3E-11	0.0E+00	6.7E-11	0.000
79005	1,1,2TriClEthan	9.25E-07	4.2E-11	0.0E+00	0.0E+00	0.0E+00	0.0E+00	4.2E-11	0.000
107062	EDC	7.17E-07	4.1E-11	0.0E+00	0.0E+00	0.0E+00	0.0E+00	4.1E-11	0.000
218019	Chrysene	3.27E-08	6.2E-13	4.7E-13	5.4E-12	3.3E-12	0.0E+00	9.8E-12	0.000
584849	T-2,4-diisocyan	1.02E-07	3.2E-12	0.0E+00	0.0E+00	0.0E+00	0.0E+00	3.2E-12	0.000
75343	1,1-DiClEthane	6.83E-07	3.1E-12	0.0E+00	0.0E+00	0.0E+00	0.0E+00	3.1E-12	0.000
26471625	ToluneneDiisocyn	1.74E-08	5.5E-13	0.0E+00	0.0E+00	0.0E+00	0.0E+00	5.5E-13	0.000
75092	Methylene Chlor	4.49E-08	1.3E-13	0.0E+00	0.0E+00	0.0E+00	0.0E+00	1.3E-13	0.000
Total			1.8E-05	2.0E-08	4.4E-07	4.3E-08	0.0E+00	1.8E-05	100.000

Table 32: Contribution of chemicals emitted from all sources after the permit action to excess cancer risk at the MEIW

Receptor 8072, Permit Action Sources

CAS	Chemical	GLC ug/m3	Excess Cancer Risk by Pathway						% of Total
			Inhal	Derm	Soil	Mother	Crop	Total	
7440439	Cadmium	1.37E-05	1.7E-07	0.0E+00	0.0E+00	0.0E+00	0.0E+00	1.7E-07	25.079
57976	7,12-DB[a]anthr	2.00E-07	2.4E-08	6.0E-09	6.8E-08	4.2E-08	0.0E+00	1.4E-07	21.305
7440382	Arsenic	2.50E-06	2.4E-08	4.4E-09	1.1E-07	0.0E+00	0.0E+00	1.4E-07	20.648
7789062	StrontiumChrom	1.63E-07	6.7E-08	3.2E-11	2.4E-09	0.0E+00	0.0E+00	6.9E-08	10.508
98566	PCBTF	2.78E-03	6.7E-08	0.0E+00	0.0E+00	0.0E+00	0.0E+00	6.7E-08	10.161
7440484	Cobalt	1.05E-06	2.3E-08	0.0E+00	0.0E+00	0.0E+00	0.0E+00	2.3E-08	3.447
7440020	Nickel	2.62E-05	1.9E-08	0.0E+00	0.0E+00	0.0E+00	0.0E+00	1.9E-08	2.905
71432	Benzene	1.10E-04	8.9E-09	0.0E+00	0.0E+00	0.0E+00	0.0E+00	8.9E-09	1.342
50000	Formaldehyde	4.22E-04	7.1E-09	0.0E+00	0.0E+00	0.0E+00	0.0E+00	7.1E-09	1.079
100414	Ethyl Benzene	1.00E-03	7.0E-09	0.0E+00	0.0E+00	0.0E+00	0.0E+00	7.0E-09	1.064
10294403	Barium Chromate	1.28E-08	5.2E-09	2.5E-12	1.8E-10	0.0E+00	0.0E+00	5.4E-09	0.822
7439921	Lead	6.24E-06	2.1E-10	3.1E-11	1.5E-09	1.8E-11	0.0E+00	1.8E-09	0.271
106990	1,3-Butadiene	3.67E-06	1.8E-09	0.0E+00	0.0E+00	0.0E+00	0.0E+00	1.8E-09	0.268
56495	3-MeCholanthren	2.25E-08	2.4E-10	6.0E-11	6.7E-10	4.2E-10	0.0E+00	1.4E-09	0.211
67663	Chloroform	7.68E-05	1.2E-09	0.0E+00	0.0E+00	0.0E+00	0.0E+00	1.2E-09	0.178
7440417	Beryllium	1.50E-07	1.0E-09	0.0E+00	0.0E+00	0.0E+00	0.0E+00	1.0E-09	0.153
50328	B[a]P	2.00E-08	3.8E-11	2.9E-11	3.3E-10	2.0E-10	0.0E+00	6.0E-10	0.090
207089	B[k]fluoranthen	1.98E-07	3.8E-11	2.9E-11	3.2E-10	2.0E-10	0.0E+00	5.9E-10	0.090
106934	EDB	2.79E-06	5.6E-10	0.0E+00	0.0E+00	0.0E+00	0.0E+00	5.6E-10	0.085
75070	Acetaldehyde	6.88E-05	5.5E-10	0.0E+00	0.0E+00	0.0E+00	0.0E+00	5.5E-10	0.084
91203	Naphthalene	4.74E-06	4.6E-10	0.0E+00	0.0E+00	0.0E+00	0.0E+00	4.6E-10	0.069
53703	D[a,h]anthracen	2.00E-08	4.0E-11	9.9E-12	1.1E-10	6.9E-11	0.0E+00	2.3E-10	0.035
205992	B[b]fluoranthen	5.69E-08	1.1E-11	8.2E-12	9.3E-11	5.8E-11	0.0E+00	1.7E-10	0.026
540885	t-Butyl acetate	4.46E-05	1.7E-10	0.0E+00	0.0E+00	0.0E+00	0.0E+00	1.7E-10	0.026
56235	CCl4	7.73E-07	9.3E-11	0.0E+00	0.0E+00	0.0E+00	0.0E+00	9.3E-11	0.014
56553	B[a]anthracene	2.25E-08	4.3E-12	3.2E-12	3.7E-11	2.3E-11	0.0E+00	6.7E-11	0.010
205823	B[j]fluoranthen	2.25E-08	4.3E-12	3.2E-12	3.7E-11	2.3E-11	0.0E+00	6.7E-11	0.010
193395	In[1,2,3-cd]pyr	2.25E-08	4.3E-12	3.2E-12	3.7E-11	2.3E-11	0.0E+00	6.7E-11	0.010
79345	TetraClEthane	1.38E-07	2.2E-11	0.0E+00	0.0E+00	0.0E+00	0.0E+00	2.2E-11	0.003
75014	Vinyl Chloride	7.35E-08	1.6E-11	0.0E+00	0.0E+00	0.0E+00	0.0E+00	1.6E-11	0.002
218019	Chrysene	3.27E-08	6.2E-13	4.7E-13	5.4E-12	3.3E-12	0.0E+00	9.8E-12	0.001
107062	EDC	9.59E-08	5.5E-12	0.0E+00	0.0E+00	0.0E+00	0.0E+00	5.5E-12	0.001
79005	1,1,2TriClEthan	8.41E-08	3.9E-12	0.0E+00	0.0E+00	0.0E+00	0.0E+00	3.9E-12	0.001
75343	1,1-DiClEthane	6.26E-08	2.9E-13	0.0E+00	0.0E+00	0.0E+00	0.0E+00	2.9E-13	0.000
584849	T-2,4-diisocyan	1.69E-12	5.3E-17	0.0E+00	0.0E+00	0.0E+00	0.0E+00	5.3E-17	0.000
Total			4.2E-07	1.1E-08	1.8E-07	4.3E-08	0.0E+00	6.6E-07	100.000

Table 33: Target organs considered in the evaluation of chronic hazard

CAS	Chemical	Hazard by Target Organ													
		CV	CNS	Immun	Kidn	GILV	Repro	Resp	Skin	Eye	Bone	Endo	Blood	Odor	Gen
1115	Glycol ethers (and their acetates)														
1125	Isocyanates														
1150	PAHs, total, with individ. comp also reported														
1221	Polymeric (Oligo) HDI							x							
9901	Diesel engine exhaust, particulate matter							x							
50000	Formaldehyde							x							
50328	Benzo[a]pyrene														
53703	Dibenz[a,h]anthracene														
56235	Carbon tetrachloride		x			x	x								
56495	3-Methylcholanthrene														
56553	Benz[a]anthracene														
57976	7,12-Dimethylbenz[a]anthracene														
67561	Methanol						x								
67630	Isopropyl alcohol				x		x								
67663	Chloroform				x	x	x								
71363	n-Butyl alcohol														
71432	Benzene												x		
74851	Ethylene														
74953	Methylene bromide														
75014	Vinyl chloride														
75070	Acetaldehyde							x							
75092	Methylene chloride {Dichloromethane}	x	x												
75343	1,1-Dichloroethane														
75456	Chlorodifluoromethane {Freon 22}														
78842	Isobutyraldehyde														
78875	1,2-Dichloropropane														
78922	sec-Butyl alcohol														
78933	Methyl ethyl ketone {2-Butanone}														
79005	1,1,2-Trichloroethane														
79107	Acrylic acid														
79345	1,1,2,2-Tetrachloroethane														
80057	4,4'-Isopropylidenediphenol														
80159	Cumene hydroperoxide														
80626	Methyl methacrylate														
83329	Acenaphthene														
85018	Phenanthrene														
85687	Butyl benzyl phthalate														
86737	Fluorene														
91203	Naphthalene							x							
91576	2-Methyl naphthalene														
95636	1,2,4-Trimethylbenzene														
98566	1-Chloro-4-(trifluoromethyl)benzene														
98828	Cumene														
100414	Ethyl benzene				x	x	x					x			
100425	Styrene		x												
101688	Methylene diphenyl diisocyanate {MDI}							x							
106934	Ethylene dibromide {EDB}						x								
106990	1,3-Butadiene						x								
107028	Acrolein							x							
107062	Ethylene dichloride {EDC}					x									
107211	Ethylene glycol				x		x	x							
107982	Propylene glycol monomethyl ether					x									
108054	Vinyl acetate							x							
108101	Methyl isobutyl ketone {Hexone}														
108656	Propylene glycol monomethyl ether acetate														
108883	Toluene									x					
108907	Chlorobenzene				x	x	x								
108952	Phenol	x	x		x	x									
110543	Hexane		x												
110827	Cyclohexane														
111422	Diethanolamine							x					x		

Table 33: Target organs considered in the evaluation of chronic hazard

111466	Diethylene glycol														
111762	Ethylene glycol monobutyl ether							x							
111900	Diethylene glycol monoethyl ether														
111966	Diethylene glycol dimethyl ether														
115071	Propylene							x							
120127	Anthracene														
121448	Triethylamine									x					
121697	N,N-Dimethylaniline														
129000	Pyrene														
191242	Benzo[g,h,i]perylene														
193395	Indeno[1,2,3-cd]pyrene														
205823	Benzo[j]fluoranthene														
205992	Benzo[b]fluoranthene														
206440	Fluoranthene														
207089	Benzo[k]fluoranthene														
208968	Acenaphthylene														
218019	Chrysene														
540841	2,2,4-Trimethylpentane														
540885	t-Butyl acetate														
542756	1,3-Dichloropropene														
584849	Toluene-2,4-diisocyanate							x							
630080	Carbon monoxide														
822060	Hexamethylene-1,6-diisocyanate							x							
1330207	Xylenes (mixed)		x					x		x					
1344281	Aluminum oxide (fibrous)														
1634044	Methyl tert-butyl ether				x	x				x					
2807309	Ethylene glycol monopropyl ether														
7429905	Aluminum														
7439921	Lead														
7439965	Manganese		x												
7439976	Mercury		2		2		2								
7440020	Nickel						x	x					x		
7440224	Silver														
7440382	Arsenic	2	2				2	2	2						
7440393	Barium														
7440417	Beryllium			x		x		x							
7440439	Cadmium				2			x							
7440473	Chromium														
7440484	Cobalt														
7440508	Copper														
7440622	Vanadium (fume or dust)														
7440666	Zinc														
7647010	Hydrochloric acid							x							
7664382	Phosphoric acid							x							
7664393	Hydrogen fluoride							x			2				
7664417	Ammonia							x							
7782492	Selenium	2	2			2									
7783064	Hydrogen sulfide							x							
7789062	Strontium chromate							x					x		
10294403	Barium chromate							x					x		
14464461	Silica, crystalline (respirable), as cristobalite							x							
14808607	Silica, crystalline (respirable), as quartz							x							
16065831	Chromium (III)							x							
18540299	Chromium, hexavalent (& compounds)							x					x		
25265718	Dipropylene glycol														
25321226	Dichlorobenzenes (mixed isomers)														
26471625	Toluene diisocyanates							x							
34590948	Dipropylene glycol monomethyl ether														

Table 34: Chronic hazard associated with emissions from the permit action alone and in conjunction with new and existing operations

Type	Rec ID	Easting	Northing	Sources	Scenario	Target Organ														MAX
		m	m			CV	CNS	IMMUN	KIDNEY	GILV	REPRO /DEVEL	RESP	SKIN	EYE	BONE/ TEETH	ENDO	BLOOD	ODOR	GENERAL	MAXHI
MEIR	4296	403394.0	3834342.0	Permit Action	OEHHA Derived	2E-03	2E-03	7E-06	4E-04	6E-07	2E-03	3E-03	2E-03	2E-06	5E-05	1E-07	6E-04	0E+00	0E+00	0.00328
				All	OEHHA Derived	1E-02	1E-02	1E-05	7E-04	7E-06	1E-02	2E-02	1E-02	3E-05	5E-05	1E-06	1E-03	0E+00	0E+00	0.01902
MEIW	2013	403000.3	3834400.0	Permit Action	OEHHA Derived	3E-03	3E-03	1E-05	6E-04	9E-07	3E-03	5E-03	3E-03	3E-06	7E-05	3E-07	1E-03	0E+00	0E+00	0.00458
				All	OEHHA Derived	1E-02	1E-02	1E-05	9E-04	7E-06	1E-02	2E-02	1E-02	5E-05	6E-05	2E-06	2E-03	0E+00	0E+00	0.02110
PMI	8072	402154.8	3834299.0	Permit Action	OEHHA Derived	7E-03	8E-03	2E-05	1E-03	2E-06	8E-03	1E-02	7E-03	6E-06	2E-04	5E-07	2E-03	0E+00	0E+00	0.01037
				All	OEHHA Derived	3E-02	3E-02	3E-05	2E-03	2E-05	3E-02	6E-02	3E-02	9E-05	2E-04	4E-06	5E-03	0E+00	0E+00	0.06076

Table 35: Contribution of chemicals emitted from all sources after the permit action to chronic hazard at the MEIR

Receptor 4296, All Sources

CAS	Chemical	GLC	Hazard Index by Target Organ														
		ug/m3	CV	CNS	IMMUN	KIDNEY	GILV	REPRO/ DEVEL	RESP	SKIN	EYE	BONE/ TEET	ENDO	BLOOD	ODOR	GEN	Max
7440382	Arsenic	3.91E-06	1E-02	1E-02	0E+00	0E+00	0E+00	1E-02	1E-02	1E-02	0E+00	0E+00	0E+00	0E+00	0E+00	0E+00	1E-02
822060	HexaMeDiisocyan	1.10E-04	0E+00	0E+00	0E+00	0E+00	0E+00	0E+00	4E-03	0E+00	0E+00	0E+00	0E+00	0E+00	0E+00	0E+00	4E-03
7440020	Nickel	1.44E-05	0E+00	0E+00	0E+00	0E+00	0E+00	1E-05	1E-03	0E+00	0E+00	0E+00	0E+00	1E-03	0E+00	0E+00	1E-03
9901	DieselExhPM	4.26E-03	0E+00	0E+00	0E+00	0E+00	0E+00	0E+00	9E-04	0E+00	0E+00	0E+00	0E+00	0E+00	0E+00	0E+00	9E-04
101688	MeDiphenDiisocy	6.25E-05	0E+00	0E+00	0E+00	0E+00	0E+00	0E+00	8E-04	0E+00	0E+00	0E+00	0E+00	0E+00	0E+00	0E+00	8E-04
7440439	Cadmium	7.14E-06	0E+00	0E+00	0E+00	5E-04	0E+00	0E+00	4E-04	0E+00	0E+00	0E+00	0E+00	0E+00	0E+00	0E+00	5E-04
71432	Benzene	1.41E-03	0E+00	0E+00	0E+00	0E+00	0E+00	0E+00	0E+00	0E+00	0E+00	0E+00	0E+00	5E-04	0E+00	0E+00	5E-04
107028	Acrolein	1.31E-04	0E+00	0E+00	0E+00	0E+00	0E+00	0E+00	4E-04	0E+00	0E+00	0E+00	0E+00	0E+00	0E+00	0E+00	4E-04
50000	Formaldehyde	2.28E-03	0E+00	0E+00	0E+00	0E+00	0E+00	0E+00	3E-04	0E+00	0E+00	0E+00	0E+00	0E+00	0E+00	0E+00	3E-04
7439976	Mercury	2.36E-06	0E+00	2E-04	0E+00	2E-04	0E+00	2E-04	0E+00	0E+00	0E+00	0E+00	0E+00	0E+00	0E+00	0E+00	2E-04
106990	1,3-Butadiene	2.46E-04	0E+00	0E+00	0E+00	0E+00	0E+00	1E-04	0E+00	0E+00	0E+00	0E+00	0E+00	0E+00	0E+00	0E+00	1E-04
7664417	NH3	1.41E-02	0E+00	0E+00	0E+00	0E+00	0E+00	0E+00	7E-05	0E+00	0E+00	0E+00	0E+00	0E+00	0E+00	0E+00	7E-05
7664393	HF	1.70E-04	0E+00	0E+00	0E+00	0E+00	0E+00	0E+00	1E-05	0E+00	0E+00	5E-05	0E+00	0E+00	0E+00	0E+00	5E-05
7664382	Phosphoric Acid	3.42E-04	0E+00	0E+00	0E+00	0E+00	0E+00	0E+00	5E-05	0E+00	0E+00	0E+00	0E+00	0E+00	0E+00	0E+00	5E-05
7439965	Manganese	3.75E-06	0E+00	4E-05	0E+00	0E+00	0E+00	0E+00	0E+00	0E+00	0E+00	0E+00	0E+00	0E+00	0E+00	0E+00	4E-05
7647010	HCl	3.64E-04	0E+00	0E+00	0E+00	0E+00	0E+00	0E+00	4E-05	0E+00	0E+00	0E+00	0E+00	0E+00	0E+00	0E+00	4E-05
67630	Isopropyl Alcoh	1.88E-01	0E+00	0E+00	0E+00	3E-05	0E+00	3E-05	0E+00	0E+00	0E+00	0E+00	0E+00	0E+00	0E+00	0E+00	3E-05
1330207	Xylenes	1.57E-02	0E+00	2E-05	0E+00	0E+00	0E+00	0E+00	2E-05	0E+00	2E-05	0E+00	0E+00	0E+00	0E+00	0E+00	2E-05
108883	Toluene	4.65E-03	0E+00	0E+00	0E+00	0E+00	0E+00	0E+00	0E+00	0E+00	1E-05	0E+00	0E+00	0E+00	0E+00	0E+00	1E-05
7440417	Beryllium	7.22E-08	0E+00	0E+00	1E-05	0E+00	3E-07	0E+00	1E-05	0E+00	0E+00	0E+00	0E+00	0E+00	0E+00	0E+00	1E-05
18540299	Cr(VI)	1.80E-06	0E+00	0E+00	0E+00	0E+00	0E+00	0E+00	9E-06	0E+00	0E+00	0E+00	0E+00	8E-07	0E+00	0E+00	9E-06
14808607	Quartz	1.98E-05	0E+00	0E+00	0E+00	0E+00	0E+00	0E+00	7E-06	0E+00	0E+00	0E+00	0E+00	0E+00	0E+00	0E+00	7E-06
584849	T-2,4-diisocyan	4.93E-08	0E+00	0E+00	0E+00	0E+00	0E+00	0E+00	6E-06	0E+00	0E+00	0E+00	0E+00	0E+00	0E+00	0E+00	6E-06
91203	Naphthalene	5.20E-05	0E+00	0E+00	0E+00	0E+00	0E+00	0E+00	6E-06	0E+00	0E+00	0E+00	0E+00	0E+00	0E+00	0E+00	6E-06
7782492	Selenium	2.47E-06	5E-06	5E-06	0E+00	0E+00	5E-06	0E+00	0E+00	0E+00	0E+00	0E+00	0E+00	0E+00	0E+00	0E+00	5E-06
107211	Ethylene Glycol	1.34E-03	0E+00	0E+00	0E+00	3E-06	0E+00	3E-06	3E-06	0E+00	0E+00	0E+00	0E+00	0E+00	0E+00	0E+00	3E-06
7789062	StrontiumChrom	3.53E-07	0E+00	0E+00	0E+00	0E+00	0E+00	0E+00	2E-06	0E+00	0E+00	0E+00	0E+00	2E-07	0E+00	0E+00	2E-06
75070	Acetaldehyde	2.31E-04	0E+00	0E+00	0E+00	0E+00	0E+00	0E+00	2E-06	0E+00	0E+00	0E+00	0E+00	0E+00	0E+00	0E+00	2E-06
106934	EDB	1.20E-06	0E+00	0E+00	0E+00	0E+00	0E+00	1E-06	0E+00	0E+00	0E+00	0E+00	0E+00	0E+00	0E+00	0E+00	1E-06
26471625	TolueneDiisocyn	1.11E-08	0E+00	0E+00	0E+00	0E+00	0E+00	0E+00	1E-06	0E+00	0E+00	0E+00	0E+00	0E+00	0E+00	0E+00	1E-06
100414	Ethyl Benzene	2.26E-03	0E+00	0E+00	0E+00	1E-06	1E-06	1E-06	0E+00	0E+00	0E+00	0E+00	1E-06	0E+00	0E+00	0E+00	1E-06
111762	EGBE	8.69E-05	0E+00	0E+00	0E+00	0E+00	0E+00	0E+00	1E-06	0E+00	0E+00	0E+00	0E+00	0E+00	0E+00	0E+00	1E-06
115071	Propylene	2.99E-03	0E+00	0E+00	0E+00	0E+00	0E+00	0E+00	1E-06	0E+00	0E+00	0E+00	0E+00	0E+00	0E+00	0E+00	1E-06
107982	PGME	1.79E-03	0E+00	0E+00	0E+00	0E+00	3E-07	0E+00	0E+00	0E+00	0E+00	0E+00	0E+00	0E+00	0E+00	0E+00	3E-07
108952	Phenol	3.95E-05	2E-07	2E-07	0E+00	2E-07	2E-07	0E+00	0E+00	0E+00	0E+00	0E+00	0E+00	0E+00	0E+00	0E+00	2E-07
10294403	Barium Chromate	3.68E-08	0E+00	0E+00	0E+00	0E+00	0E+00	0E+00	2E-07	0E+00	0E+00	0E+00	0E+00	2E-08	0E+00	0E+00	2E-07
110543	Hexane	6.15E-04	0E+00	9E-08	0E+00	0E+00	0E+00	0E+00	0E+00	0E+00	0E+00	0E+00	0E+00	0E+00	0E+00	0E+00	9E-08
67663	Chloroform	2.38E-05	0E+00	0E+00	0E+00	8E-08	8E-08	8E-08	0E+00	0E+00	0E+00	0E+00	0E+00	0E+00	0E+00	0E+00	8E-08
1634044	Me t-ButylEther	5.95E-04	0E+00	0E+00	0E+00	7E-08	7E-08	0E+00	0E+00	0E+00	7E-08	0E+00	0E+00	0E+00	0E+00	0E+00	7E-08
67561	Methanol	2.43E-04	0E+00	0E+00	0E+00	0E+00	0E+00	6E-08	0E+00	0E+00	0E+00	0E+00	0E+00	0E+00	0E+00	0E+00	6E-08
7783064	H2S	5.04E-07	0E+00	0E+00	0E+00	0E+00	0E+00	0E+00	5E-08	0E+00	0E+00	0E+00	0E+00	0E+00	0E+00	0E+00	5E-08

Table 35: Contribution of chemicals emitted from all sources after the permit action to chronic hazard at the MEIR

Receptor 4296, All Sources

CAS	Chemical	GLC	Hazard Index by Target Organ														
		ug/m3	CV	CNS	IMMUN	KIDNEY	GILV	REPRO/ DEVEL	RESP	SKIN	EYE	BONE/ TEET	ENDO	BLOOD	ODOR	GEN	Max
14464461	Cristobalite	1.24E-07	0E+00	0E+00	0E+00	0E+00	0E+00	0E+00	4E-08	0E+00	0E+00	0E+00	0E+00	0E+00	0E+00	0E+00	4E-08
100425	Styrene	3.41E-05	0E+00	4E-08	0E+00	0E+00	0E+00	0E+00	0E+00	0E+00	0E+00	0E+00	0E+00	0E+00	0E+00	0E+00	4E-08
108907	Chlorobenzn	3.09E-05	0E+00	0E+00	0E+00	3E-08	3E-08	3E-08	0E+00	0E+00	0E+00	0E+00	0E+00	0E+00	0E+00	0E+00	3E-08
121448	Triethylamine	2.71E-06	0E+00	0E+00	0E+00	0E+00	0E+00	0E+00	0E+00	0E+00	1E-08	0E+00	0E+00	0E+00	0E+00	0E+00	1E-08
56235	CCl4	5.21E-07	0E+00	1E-08	0E+00	0E+00	1E-08	1E-08	0E+00	0E+00	0E+00	0E+00	0E+00	0E+00	0E+00	0E+00	1E-08
111422	Diethanolamine	7.13E-09	0E+00	0E+00	0E+00	0E+00	0E+00	0E+00	2E-09	0E+00	0E+00	0E+00	0E+00	2E-09	0E+00	0E+00	2E-09
108054	Vinyl Acetate	1.28E-07	0E+00	0E+00	0E+00	0E+00	0E+00	0E+00	6E-10	0E+00	0E+00	0E+00	0E+00	0E+00	0E+00	0E+00	6E-10
107062	EDC	2.11E-07	0E+00	0E+00	0E+00	0E+00	5E-10	0E+00	0E+00	0E+00	0E+00	0E+00	0E+00	0E+00	0E+00	0E+00	5E-10
16065831	Chromium (III)	8.42E-12	0E+00	0E+00	0E+00	0E+00	0E+00	0E+00	1E-10	0E+00	0E+00	0E+00	0E+00	0E+00	0E+00	0E+00	1E-10
75092	Methylene Chlor	1.01E-08	3E-11	3E-11	0E+00	0E+00	0E+00	0E+00	0E+00	0E+00	0E+00	0E+00	0E+00	0E+00	0E+00	0E+00	3E-11
1221	Polymeric (Oligo) HI	7.82E-12	0E+00	0E+00	0E+00	0E+00	0E+00	0E+00	2E-11	0E+00	0E+00	0E+00	0E+00	0E+00	0E+00	0E+00	2E-11
Total			1E-02	1E-02	1E-05	7E-04	7E-06	1E-02	2E-02	1E-02	3E-05	5E-05	1E-06	1E-03	0E+00	0E+00	2E-02

Table 36: Contribution of chemicals emitted from permit action operations to chronic hazard at the MEIR

Receptor 4296, Permit Action Sources

CAS	Chemical	Hazard Index by Target Organ														
		CV	CNS	IMMUN	KIDNEY	GILV	REPRO/DEVE	RESP	SKIN	EYE	BONE/TEETH	ENDO	BLOOD	ODOR	GEN	Max
7440382	Arsenic	2E-03	2E-03	0E+00	0E+00	0E+00	2E-03	2E-03	2E-03	0E+00	0E+00	0E+00	0E+00	0E+00	0E+00	2E-03
7440020	Nickel	0E+00	0E+00	0E+00	0E+00	0E+00	7E-06	6E-04	0E+00	0E+00	0E+00	0E+00	6E-04	0E+00	0E+00	6E-04
7440439	Cadmium	0E+00	0E+00	0E+00	3E-04	0E+00	0E+00	2E-04	0E+00	0E+00	0E+00	0E+00	0E+00	0E+00	0E+00	3E-04
7439976	Mercury	0E+00	1E-04	0E+00	1E-04	0E+00	1E-04	0E+00	0E+00	0E+00	0E+00	0E+00	0E+00	0E+00	0E+00	1E-04
7664417	NH3	0E+00	0E+00	0E+00	0E+00	0E+00	0E+00	6E-05	0E+00	0E+00	0E+00	0E+00	0E+00	0E+00	0E+00	6E-05
7664393	HF	0E+00	0E+00	0E+00	0E+00	0E+00	0E+00	1E-05	0E+00	0E+00	5E-05	0E+00	0E+00	0E+00	0E+00	5E-05
107028	Acrolein	0E+00	0E+00	0E+00	0E+00	0E+00	0E+00	4E-05	0E+00	0E+00	0E+00	0E+00	0E+00	0E+00	0E+00	4E-05
7439965	Manganese	0E+00	2E-05	0E+00	0E+00	0E+00	0E+00	0E+00	0E+00	0E+00	0E+00	0E+00	0E+00	0E+00	0E+00	2E-05
50000	Formaldehyde	0E+00	0E+00	0E+00	0E+00	0E+00	0E+00	1E-05	0E+00	0E+00	0E+00	0E+00	0E+00	0E+00	0E+00	1E-05
71432	Benzene	0E+00	0E+00	0E+00	0E+00	0E+00	0E+00	0E+00	0E+00	0E+00	0E+00	0E+00	1E-05	0E+00	0E+00	1E-05
7440417	Beryllium	0E+00	0E+00	7E-06	0E+00	2E-07	0E+00	7E-06	0E+00	0E+00	0E+00	0E+00	0E+00	0E+00	0E+00	7E-06
7647010	HCl	0E+00	0E+00	0E+00	0E+00	0E+00	0E+00	6E-06	0E+00	0E+00	0E+00	0E+00	0E+00	0E+00	0E+00	6E-06
1330207	Xylenes	0E+00	1E-06	0E+00	0E+00	0E+00	0E+00	1E-06	0E+00	1E-06	0E+00	0E+00	0E+00	0E+00	0E+00	1E-06
106934	EDB	0E+00	0E+00	0E+00	0E+00	0E+00	1E-06	0E+00	0E+00	0E+00	0E+00	0E+00	0E+00	0E+00	0E+00	1E-06
106990	1,3-Butadiene	0E+00	0E+00	0E+00	0E+00	0E+00	6E-07	0E+00	0E+00	0E+00	0E+00	0E+00	0E+00	0E+00	0E+00	6E-07
108883	Toluene	0E+00	0E+00	0E+00	0E+00	0E+00	0E+00	0E+00	0E+00	4E-07	0E+00	0E+00	0E+00	0E+00	0E+00	4E-07
7789062	StrontiumChrom	0E+00	0E+00	0E+00	0E+00	0E+00	0E+00	2E-07	0E+00	0E+00	0E+00	0E+00	2E-08	0E+00	0E+00	2E-07
7782492	Selenium	2E-07	2E-07	0E+00	0E+00	2E-07	0E+00	0E+00	0E+00	0E+00	0E+00	0E+00	0E+00	0E+00	0E+00	2E-07
91203	Naphthalene	0E+00	0E+00	0E+00	0E+00	0E+00	0E+00	2E-07	0E+00	0E+00	0E+00	0E+00	0E+00	0E+00	0E+00	2E-07
75070	Acetaldehyde	0E+00	0E+00	0E+00	0E+00	0E+00	0E+00	2E-07	0E+00	0E+00	0E+00	0E+00	0E+00	0E+00	0E+00	2E-07
100414	Ethyl Benzene	0E+00	0E+00	0E+00	1E-07	1E-07	1E-07	0E+00	0E+00	0E+00	0E+00	1E-07	0E+00	0E+00	0E+00	1E-07
67663	Chloroform	0E+00	0E+00	0E+00	8E-08	8E-08	8E-08	0E+00	0E+00	0E+00	0E+00	0E+00	0E+00	0E+00	0E+00	8E-08
14808607	Quartz	0E+00	0E+00	0E+00	0E+00	0E+00	0E+00	8E-08	0E+00	0E+00	0E+00	0E+00	0E+00	0E+00	0E+00	8E-08
67630	Isopropyl Alcoh	0E+00	0E+00	0E+00	3E-08	0E+00	3E-08	0E+00	0E+00	0E+00	0E+00	0E+00	0E+00	0E+00	0E+00	3E-08
115071	Propylene	0E+00	0E+00	0E+00	0E+00	0E+00	0E+00	2E-08	0E+00	0E+00	0E+00	0E+00	0E+00	0E+00	0E+00	2E-08
10294403	Barium Chromate	0E+00	0E+00	0E+00	0E+00	0E+00	0E+00	2E-08	0E+00	0E+00	0E+00	0E+00	1E-09	0E+00	0E+00	2E-08
56235	CCl4	0E+00	6E-09	0E+00	0E+00	6E-09	6E-09	0E+00	0E+00	0E+00	0E+00	0E+00	0E+00	0E+00	0E+00	6E-09
67561	Methanol	0E+00	0E+00	0E+00	0E+00	0E+00	5E-09	0E+00	0E+00	0E+00	0E+00	0E+00	0E+00	0E+00	0E+00	5E-09
110543	Hexane	0E+00	4E-09	0E+00	0E+00	0E+00	0E+00	0E+00	0E+00	0E+00	0E+00	0E+00	0E+00	0E+00	0E+00	4E-09
822060	HexaMeDiisocyan	0E+00	0E+00	0E+00	0E+00	0E+00	0E+00	6E-10	0E+00	0E+00	0E+00	0E+00	0E+00	0E+00	0E+00	6E-10
101688	MeDiphenDiisocy	0E+00	0E+00	0E+00	0E+00	0E+00	0E+00	2E-10	0E+00	0E+00	0E+00	0E+00	0E+00	0E+00	0E+00	2E-10
16065831	Chromium (III)	0E+00	0E+00	0E+00	0E+00	0E+00	0E+00	1E-10	0E+00	0E+00	0E+00	0E+00	0E+00	0E+00	0E+00	1E-10
107062	EDC	0E+00	0E+00	0E+00	0E+00	8E-11	0E+00	0E+00	0E+00	0E+00	0E+00	0E+00	0E+00	0E+00	0E+00	8E-11
584849	T-2,4-diisocyan	0E+00	0E+00	0E+00	0E+00	0E+00	0E+00	5E-11	0E+00	0E+00	0E+00	0E+00	0E+00	0E+00	0E+00	5E-11
100425	Styrene	0E+00	4E-11	0E+00	0E+00	0E+00	0E+00	0E+00	0E+00	0E+00	0E+00	0E+00	0E+00	0E+00	0E+00	4E-11
108907	Chlorobenzn	0E+00	0E+00	0E+00	3E-11	3E-11	3E-11	0E+00	0E+00	0E+00	0E+00	0E+00	0E+00	0E+00	0E+00	3E-11
1221	Polymeric (Oligo) H	0E+00	0E+00	0E+00	0E+00	0E+00	0E+00	2E-11	0E+00	0E+00	0E+00	0E+00	0E+00	0E+00	0E+00	2E-11
Total		2E-03	2E-03	7E-06	4E-04	6E-07	2E-03	3E-03	2E-03	2E-06	5E-05	1E-07	6E-04	0E+00	0E+00	3E-03

Table 37: Target organs considered in the evaluation of acute hazard

CAS	Chemical	Hazard by Target Organ													
		CV	CNS	Immun	Kidn	GILV	Repro	Resp	Skin	Eye	Bone	Endo	Blood	Odor	General
106990	1,3-Butadiene						x								
75070	Acetaldehyde							x		x					
107028	Acrolein							x		x					
79107	Acrylic acid							x		x					
7664417	Ammonia							x		x					
7440382	Arsenic	x	x				x								
71432	Benzene			x			x						x		
56235	Carbon tetrachloride		x			x	x								
67663	Chloroform		x				x	x							
16065831	Chromium (III)							x							
7440508	Copper							x							
111762	Ethylene glycol monobutyl ether							x		x					
50000	Formaldehyde									x					
822060	Hexamethylene-1,6-diisocyanate							x							
7647010	Hydrochloric acid							x		x					
7664393	Hydrogen fluoride							x		x					
7783064	Hydrogen sulfide		x												
67630	Isopropyl alcohol							x		x					
7439976	Mercury		x				x								
67561	Methanol		x												
78933	Methyl ethyl ketone {2-Butanone}							x		x					
75092	Methylene chloride {Dichloromethane}	x	x												
101688	Methylene diphenyl diisocyanate {MDI}							x							
7440020	Nickel			x											
108952	Phenol							x		x					
1221	Polymeric (Oligo) HDI							x							
100425	Styrene						x	x		x					
540885	t-Butyl acetate														
108883	Toluene		x					x		x					
26471625	Toluene diisocyanates							x							
584849	Toluene-2,4-diisocyanate							x							
121448	Triethylamine		x							x					
7440622	Vanadium (fume or dust)							x		x					
75014	Vinyl chloride		x					x		x					
1330207	Xylenes (mixed)		x					x		x					

Table 38: Acute hazard associated with emissions from the permit action alone and in conjunction existing operations

Type	Rec ID	Easting	Northing	Sources	Acute Hazard Index														
		m	m		CV	CNS	IMMUN	KIDNEY	GILV	REPRO/DEVEL	RESP	SKIN	EYE	BONE/TEETH	ENDO	BLOOD	ODOR	GENERAL	MAX HI
MEI, All	8065	401804.8	3834301	Permit Action	0.0009	0.0019	0.0158	0.0000	0.0000	0.0082	0.1834	0.0000	0.2406	0.0000	0.0000	0.0068	0.0000	0.0000	0.2406
				2022 CEIR Sources	0.2881	0.3188	0.2437	0.0000	0.0000	0.3845	0.6737	0.0000	0.3262	0.0000	0.0000	0.0659	0.0000	0.0000	0.6165
				All	0.2890	0.3207	0.2595	0.0000	0.0000	0.3927	0.8571	0.0000	0.5668	0.0000	0.0000	0.0727	0.0000	0.0000	0.8571
MEI, S4 Exp	8145	400630.8	3833746	Permit Action	0.3754	0.4165	0.3246	0.0000	0.0000	0.5039	0.8589	0.0000	0.8787	0.0000	0.0000	0.0887	0.0000	0.0000	0.8787

Table 39: Contribution of chemicals emitted from all operating sources to acute hazard at the MEI

Receptor 8065, All sources

CAS	Chemical	GLC	Hazard Index by Target Organ														
		ug/m3	CV	CNS	IMMUN	KIDNEY	GILV	REPRO/ DEVEL	RESP	SKIN	EYE	BONE/ TEETH	ENDO	BLOOD	ODOR	GENERAL	Max
822060	HexaMeDiisocyan	1.46E-01	0E+00	0E+00	0E+00	0E+00	0E+00	0E+00	5E-01	0E+00	0E+00	0E+00	0E+00	0E+00	0E+00	0E+00	5E-01
7440382	Arsenic	5.78E-02	3E-01	3E-01	0E+00	0E+00	0E+00	3E-01	0E+00	0E+00	0E+00	0E+00	0E+00	0E+00	0E+00	0E+00	3E-01
107028	Acrolein	6.01E-01	0E+00	0E+00	0E+00	0E+00	0E+00	0E+00	2E-01	0E+00	2E-01	0E+00	0E+00	0E+00	0E+00	0E+00	2E-01
50000	Formaldehyde	1.11E+01	0E+00	0E+00	0E+00	0E+00	0E+00	0E+00	0E+00	0E+00	2E-01	0E+00	0E+00	0E+00	0E+00	0E+00	2E-01
7440020	Nickel	3.74E-02	0E+00	0E+00	2E-01	0E+00	0E+00	0E+00	0E+00	0E+00	0E+00	0E+00	0E+00	0E+00	0E+00	0E+00	2E-01
67630	Isopropyl Alcoh	2.71E+02	0E+00	0E+00	0E+00	0E+00	0E+00	0E+00	8E-02	0E+00	8E-02	0E+00	0E+00	0E+00	0E+00	0E+00	8E-02
71432	Benzene	1.96E+00	0E+00	0E+00	7E-02	0E+00	0E+00	7E-02	0E+00	0E+00	0E+00	0E+00	0E+00	7E-02	0E+00	0E+00	7E-02
7439976	Mercury	1.79E-02	0E+00	3E-02	0E+00	0E+00	0E+00	3E-02	0E+00	0E+00	0E+00	0E+00	0E+00	0E+00	0E+00	0E+00	3E-02
7664393	HF	3.56E+00	0E+00	0E+00	0E+00	0E+00	0E+00	0E+00	1E-02	0E+00	1E-02	0E+00	0E+00	0E+00	0E+00	0E+00	1E-02
7664417	NH3	3.79E+01	0E+00	0E+00	0E+00	0E+00	0E+00	0E+00	1E-02	0E+00	1E-02	0E+00	0E+00	0E+00	0E+00	0E+00	1E-02
75070	Acetaldehyde	2.98E+00	0E+00	0E+00	0E+00	0E+00	0E+00	0E+00	6E-03	0E+00	6E-03	0E+00	0E+00	0E+00	0E+00	0E+00	6E-03
101688	MeDiphenDiisocy	7.00E-02	0E+00	0E+00	0E+00	0E+00	0E+00	0E+00	6E-03	0E+00	0E+00	0E+00	0E+00	0E+00	0E+00	0E+00	6E-03
78933	MEK	4.82E+01	0E+00	0E+00	0E+00	0E+00	0E+00	0E+00	4E-03	0E+00	4E-03	0E+00	0E+00	0E+00	0E+00	0E+00	4E-03
106990	1,3-Butadiene	8.07E-01	0E+00	0E+00	0E+00	0E+00	0E+00	1E-03	0E+00	0E+00	0E+00	0E+00	0E+00	0E+00	0E+00	0E+00	1E-03
7647010	HCl	2.32E+00	0E+00	0E+00	0E+00	0E+00	0E+00	0E+00	1E-03	0E+00	1E-03	0E+00	0E+00	0E+00	0E+00	0E+00	1E-03
108883	Toluene	4.78E+00	0E+00	1E-03	0E+00	0E+00	0E+00	0E+00	1E-03	0E+00	1E-03	0E+00	0E+00	0E+00	0E+00	0E+00	1E-03
1330207	Xylenes	2.01E+01	0E+00	9E-04	0E+00	0E+00	0E+00	0E+00	9E-04	0E+00	9E-04	0E+00	0E+00	0E+00	0E+00	0E+00	9E-04
7440508	Copper	3.82E-02	0E+00	0E+00	0E+00	0E+00	0E+00	0E+00	4E-04	0E+00	0E+00	0E+00	0E+00	0E+00	0E+00	0E+00	4E-04
7440622	Vanadium	9.65E-03	0E+00	0E+00	0E+00	0E+00	0E+00	0E+00	3E-04	0E+00	3E-04	0E+00	0E+00	0E+00	0E+00	0E+00	3E-04
7783064	H2S	1.22E-03	0E+00	3E-05	0E+00	0E+00	0E+00	0E+00	0E+00	0E+00	0E+00	0E+00	0E+00	0E+00	0E+00	0E+00	3E-05
1221	Polymeric (Oligo) H	1.09E-04	0E+00	0E+00	0E+00	0E+00	0E+00	0E+00	2E-05	0E+00	0E+00	0E+00	0E+00	0E+00	0E+00	0E+00	2E-05
584849	T-2,4-diisocyan	4.35E-05	0E+00	0E+00	0E+00	0E+00	0E+00	0E+00	2E-05	0E+00	0E+00	0E+00	0E+00	0E+00	0E+00	0E+00	2E-05
67663	Chloroform	2.46E-03	0E+00	2E-05	0E+00	0E+00	0E+00	2E-05	2E-05	0E+00	0E+00	0E+00	0E+00	0E+00	0E+00	0E+00	2E-05
111762	EGBE	7.65E-02	0E+00	0E+00	0E+00	0E+00	0E+00	0E+00	2E-05	0E+00	2E-05	0E+00	0E+00	0E+00	0E+00	0E+00	2E-05
67561	Methanol	4.04E-01	0E+00	1E-05	0E+00	0E+00	0E+00	0E+00	0E+00	0E+00	0E+00	0E+00	0E+00	0E+00	0E+00	0E+00	1E-05
108952	Phenol	3.69E-02	0E+00	0E+00	0E+00	0E+00	0E+00	0E+00	6E-06	0E+00	6E-06	0E+00	0E+00	0E+00	0E+00	0E+00	6E-06
26471625	TolueneDiisocyn	5.09E-06	0E+00	0E+00	0E+00	0E+00	0E+00	0E+00	3E-06	0E+00	0E+00	0E+00	0E+00	0E+00	0E+00	0E+00	3E-06
56235	CCl4	3.17E-03	0E+00	2E-06	0E+00	0E+00	2E-06	2E-06	0E+00	0E+00	0E+00	0E+00	0E+00	0E+00	0E+00	0E+00	2E-06
16065831	Chromium (III)	7.97E-07	0E+00	0E+00	0E+00	0E+00	0E+00	0E+00	2E-06	0E+00	0E+00	0E+00	0E+00	0E+00	0E+00	0E+00	2E-06
630080	Carbon Monoxide	3.46E-02	2E-06	0E+00	0E+00	0E+00	0E+00	0E+00	0E+00	0E+00	0E+00	0E+00	0E+00	0E+00	0E+00	0E+00	2E-06
100425	Styrene	2.51E-02	0E+00	0E+00	0E+00	0E+00	0E+00	1E-06	1E-06	0E+00	1E-06	0E+00	0E+00	0E+00	0E+00	0E+00	1E-06
121448	Triethylamine	1.57E-03	0E+00	6E-07	0E+00	0E+00	0E+00	0E+00	0E+00	0E+00	6E-07	0E+00	0E+00	0E+00	0E+00	0E+00	6E-07
79107	Acrylic acid	5.35E-04	0E+00	0E+00	0E+00	0E+00	0E+00	0E+00	9E-08	0E+00	9E-08	0E+00	0E+00	0E+00	0E+00	0E+00	9E-08
75014	Vinyl Chloride	1.29E-03	0E+00	7E-09	0E+00	0E+00	0E+00	0E+00	7E-09	0E+00	7E-09	0E+00	0E+00	0E+00	0E+00	0E+00	7E-09
75092	Methylene Chlor	2.25E-05	2E-09	2E-09	0E+00	0E+00	0E+00	0E+00	0E+00	0E+00	0E+00	0E+00	0E+00	0E+00	0E+00	0E+00	2E-09
Total			3E-01	3E-01	3E-01	0E+00	2E-06	4E-01	9E-01	0E+00	6E-01	0E+00	0E+00	7E-02	0E+00	0E+00	9E-01

Table 40: Contribution of chemicals emitted from permit action operations to acute hazard at the MEI

Receptor 8145, Permit Action Sources

CAS	Chemical	Hazard Index by Target Organ														
		CV	CNS	IMMUN	KIDNEY	GILV	REPRO/ DEVEL	RESP	SKIN	EYE	BONE/ TEETH	ENDO	BLOOD	ODOR	GENERAL	Max
107028	Acrolein	0E+00	0E+00	0E+00	0E+00	0E+00	4E-01	0E+00	4E-01	0E+00	0E+00	0E+00	0E+00	0E+00	4E-01	4E-01
50000	Formaldehyde	0E+00	0E+00	0E+00	0E+00	0E+00	0E+00	0E+00	1E-01	0E+00	0E+00	0E+00	0E+00	0E+00	1E-01	1E-01
7664393	HF	0E+00	0E+00	0E+00	0E+00	0E+00	5E-02	0E+00	5E-02	0E+00	0E+00	0E+00	0E+00	0E+00	5E-02	5E-02
71432	Benzene	0E+00	2E-02	0E+00	0E+00	2E-02	0E+00	0E+00	0E+00	0E+00	0E+00	2E-02	0E+00	0E+00	2E-02	2E-02
7440020	Nickel	0E+00	2E-02	0E+00	0E+00	0E+00	0E+00	0E+00	0E+00	0E+00	0E+00	0E+00	0E+00	0E+00	2E-02	2E-02
75070	Acetaldehyde	0E+00	0E+00	0E+00	0E+00	0E+00	2E-03	0E+00	2E-03	0E+00	0E+00	0E+00	0E+00	0E+00	2E-03	2E-03
7664417	NH3	0E+00	0E+00	0E+00	0E+00	0E+00	2E-03	0E+00	2E-03	0E+00	0E+00	0E+00	0E+00	0E+00	2E-03	2E-03
7647010	HCl	0E+00	0E+00	0E+00	0E+00	0E+00	2E-03	0E+00	2E-03	0E+00	0E+00	0E+00	0E+00	0E+00	2E-03	2E-03
7440382	Arsenic	2E-03	0E+00	0E+00	0E+00	2E-03	0E+00	0E+00	0E+00	0E+00	0E+00	0E+00	0E+00	0E+00	2E-03	2E-03
1330207	Xylenes	1E-03	0E+00	0E+00	0E+00	0E+00	1E-03	0E+00	1E-03	0E+00	0E+00	0E+00	0E+00	0E+00	1E-03	1E-03
7439976	Mercury	7E-04	0E+00	0E+00	0E+00	7E-04	0E+00	0E+00	0E+00	0E+00	0E+00	0E+00	0E+00	0E+00	7E-04	7E-04
67630	Isopropyl Alcoh	0E+00	0E+00	0E+00	0E+00	0E+00	6E-04	0E+00	6E-04	0E+00	0E+00	0E+00	0E+00	0E+00	6E-04	6E-04
822060	HexaMeDiisocyan	0E+00	0E+00	0E+00	0E+00	0E+00	5E-04	0E+00	0E+00	0E+00	0E+00	0E+00	0E+00	0E+00	5E-04	5E-04
106990	1,3-Butadiene	0E+00	0E+00	0E+00	0E+00	4E-04	0E+00	0E+00	0E+00	0E+00	0E+00	0E+00	0E+00	0E+00	4E-04	4E-04
78933	MEK	0E+00	0E+00	0E+00	0E+00	0E+00	3E-04	0E+00	3E-04	0E+00	0E+00	0E+00	0E+00	0E+00	3E-04	3E-04
108883	Toluene	2E-04	0E+00	0E+00	0E+00	0E+00	2E-04	0E+00	2E-04	0E+00	0E+00	0E+00	0E+00	0E+00	2E-04	2E-04
7440622	Vanadium	0E+00	0E+00	0E+00	0E+00	0E+00	1E-04	0E+00	1E-04	0E+00	0E+00	0E+00	0E+00	0E+00	1E-04	1E-04
67663	Chloroform	3E-05	0E+00	0E+00	0E+00	3E-05	3E-05	0E+00	0E+00	0E+00	0E+00	0E+00	0E+00	0E+00	3E-05	3E-05
67561	Methanol	3E-05	0E+00	0E+00	0E+00	0E+00	0E+00	0E+00	0E+00	0E+00	0E+00	0E+00	0E+00	0E+00	3E-05	3E-05
1221	Polymeric (Oligo) H	0E+00	0E+00	0E+00	0E+00	0E+00	1E-05	0E+00	0E+00	0E+00	0E+00	0E+00	0E+00	0E+00	1E-05	1E-05
7440508	Copper	0E+00	0E+00	0E+00	0E+00	0E+00	1E-05	0E+00	0E+00	0E+00	0E+00	0E+00	0E+00	0E+00	1E-05	1E-05
101688	MeDiphenDiisocy	0E+00	0E+00	0E+00	0E+00	0E+00	1E-05	0E+00	0E+00	0E+00	0E+00	0E+00	0E+00	0E+00	1E-05	1E-05
56235	CCl4	3E-06	0E+00	0E+00	3E-06	3E-06	0E+00	0E+00	0E+00	0E+00	0E+00	0E+00	0E+00	0E+00	3E-06	3E-06
584849	T-2,4-diisocyan	0E+00	0E+00	0E+00	0E+00	0E+00	2E-06	0E+00	0E+00	0E+00	0E+00	0E+00	0E+00	0E+00	2E-06	2E-06
16065831	Chromium (III)	0E+00	0E+00	0E+00	0E+00	0E+00	1E-06	0E+00	0E+00	0E+00	0E+00	0E+00	0E+00	0E+00	1E-06	1E-06
100425	Styrene	0E+00	0E+00	0E+00	0E+00	2E-07	2E-07	0E+00	2E-07	0E+00	0E+00	0E+00	0E+00	0E+00	2E-07	2E-07
75014	Vinyl Chloride	1E-08	0E+00	0E+00	0E+00	0E+00	1E-08	0E+00	1E-08	0E+00	0E+00	0E+00	0E+00	0E+00	1E-08	1E-08
Total		4E-03	3E-02	0E+00	0E+00	2E-02	4E-01	0E+00	6E-01	0E+00	0E+00	2E-02	0E+00	0E+00	6E-01	6E-01

Figure 1: Location of new coating operations at Site 4

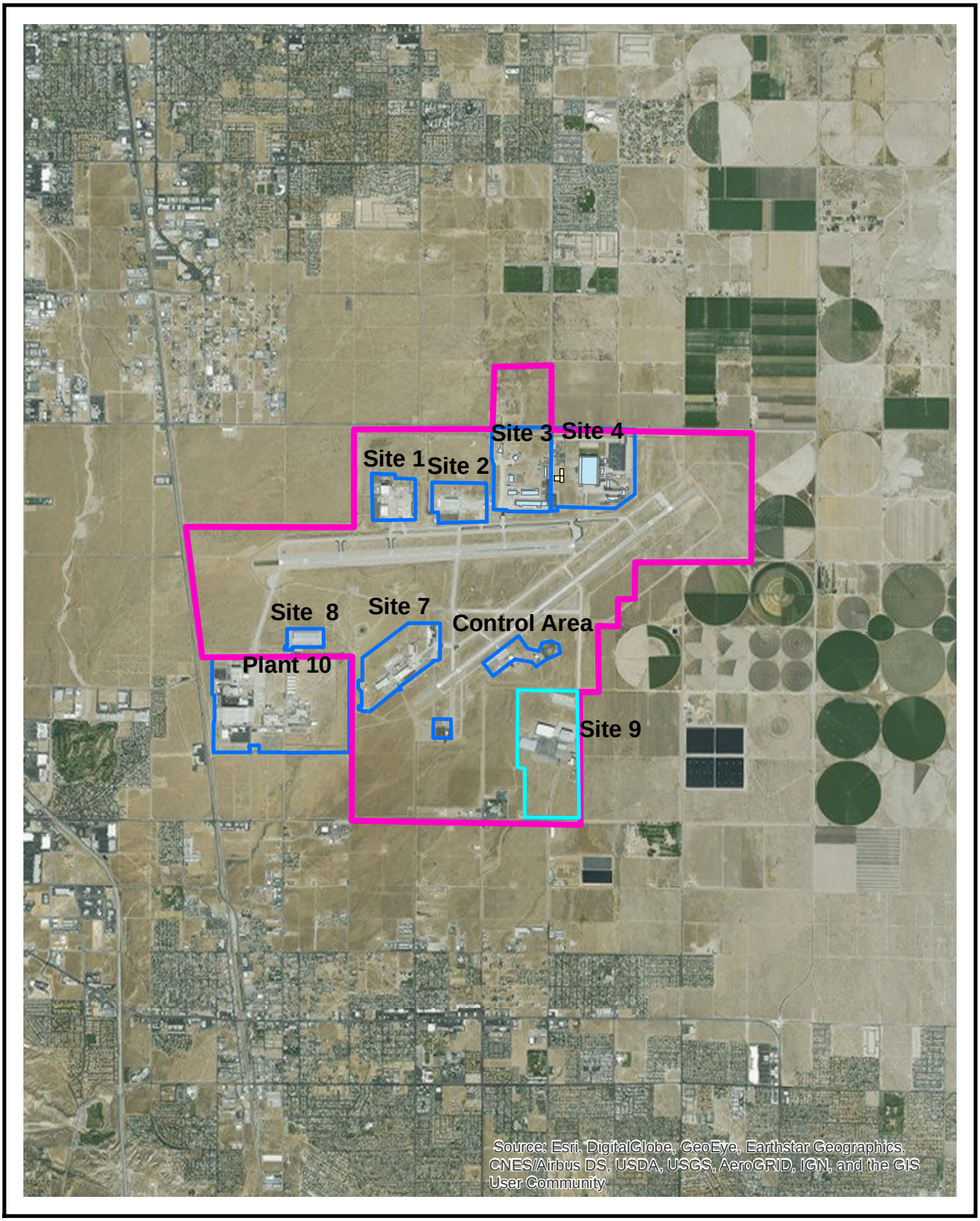

Figure 2: Air Force Palnt 42

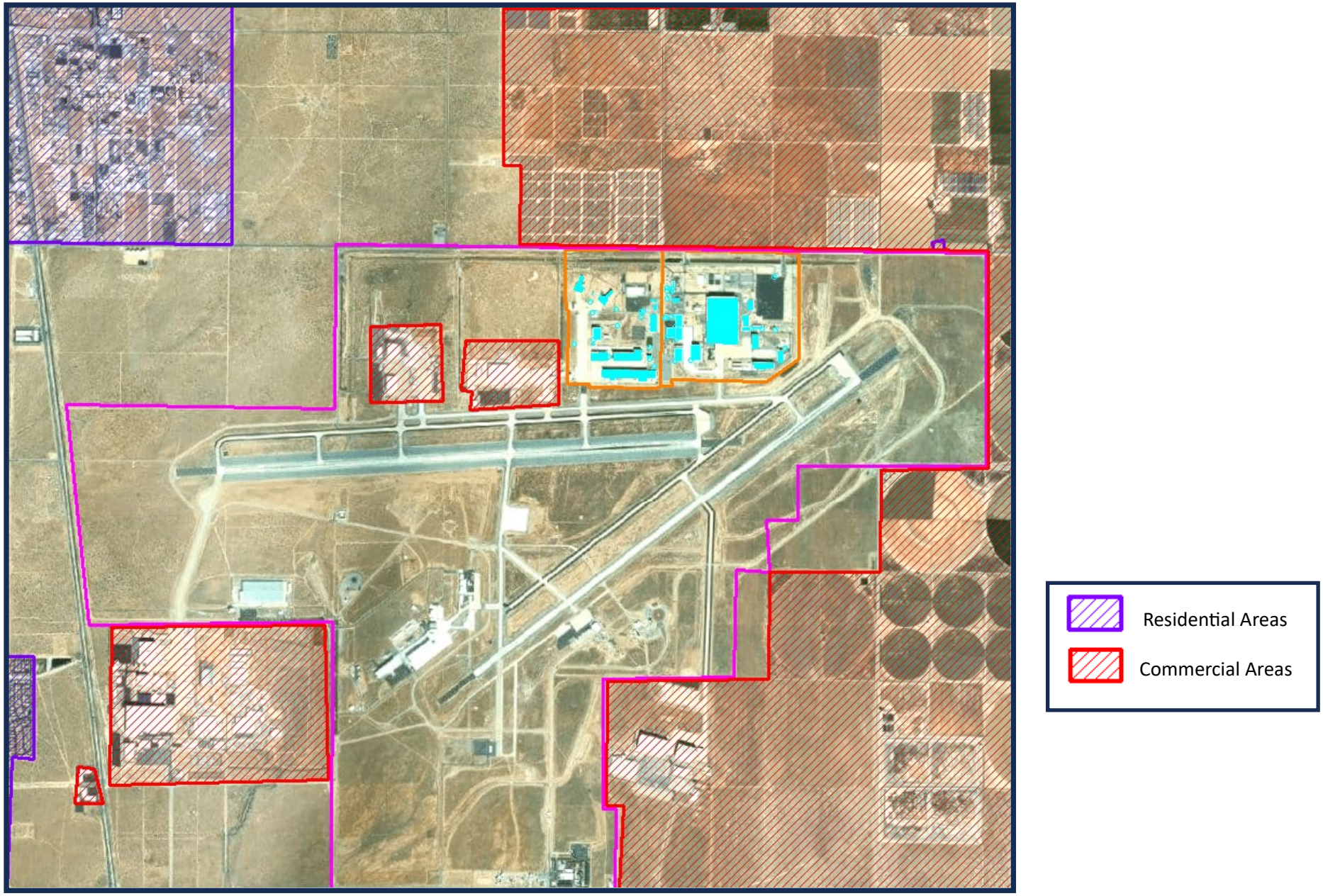

Figure 3: Land use in the vicinity of Air Force Plant 42

WINDROSE PLOT:

Station #23182

DISPLAY:

Wind Speed
Direction (blowing from)

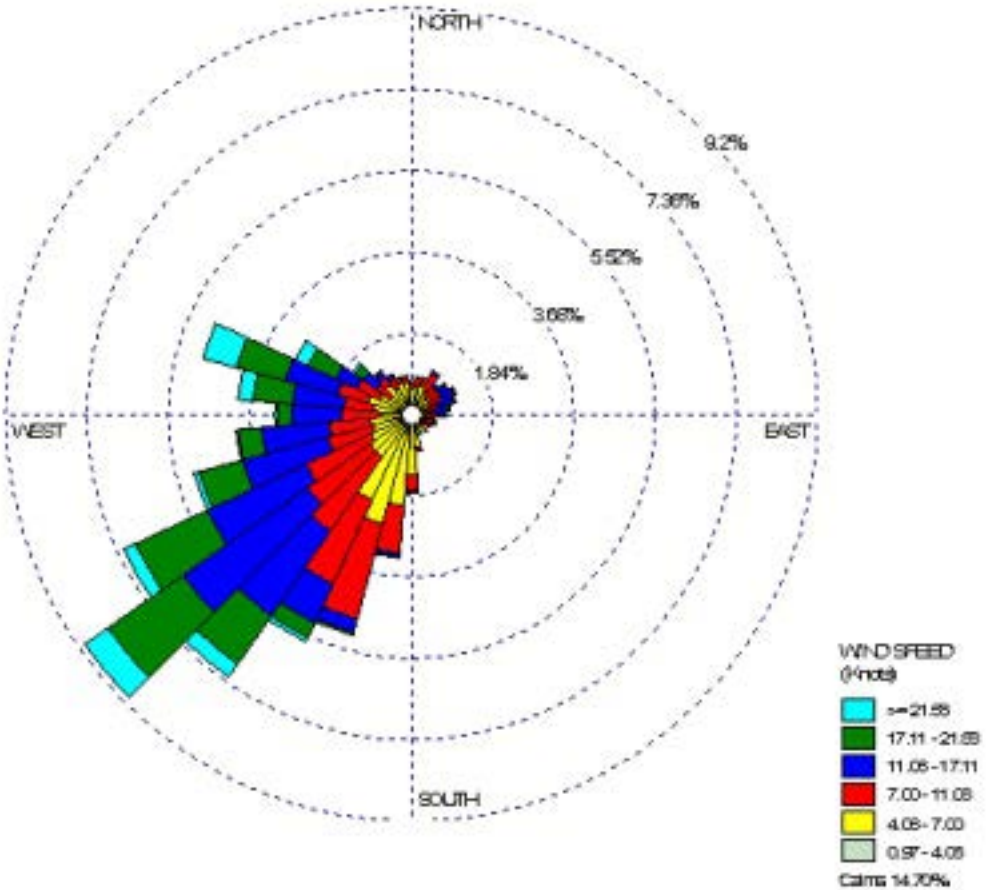

COMMENTS:	DATA PERIOD:	COMPANY NAME:	
	Start Date: 1/1/2009 - 00:00 **End Date: 12/31/2009 - 23:59**	**Figure 4: Wind rose**	
	CALM WINDS:	TOTAL COUNT:	
	14.70%	**8759 hrs.**	
	AVG. WIND SPEED:	DATE:	PROJECT NO.:
	9.06 Knots	**5/10/2017**	

WRPLOT View - Lakes Environmental Software

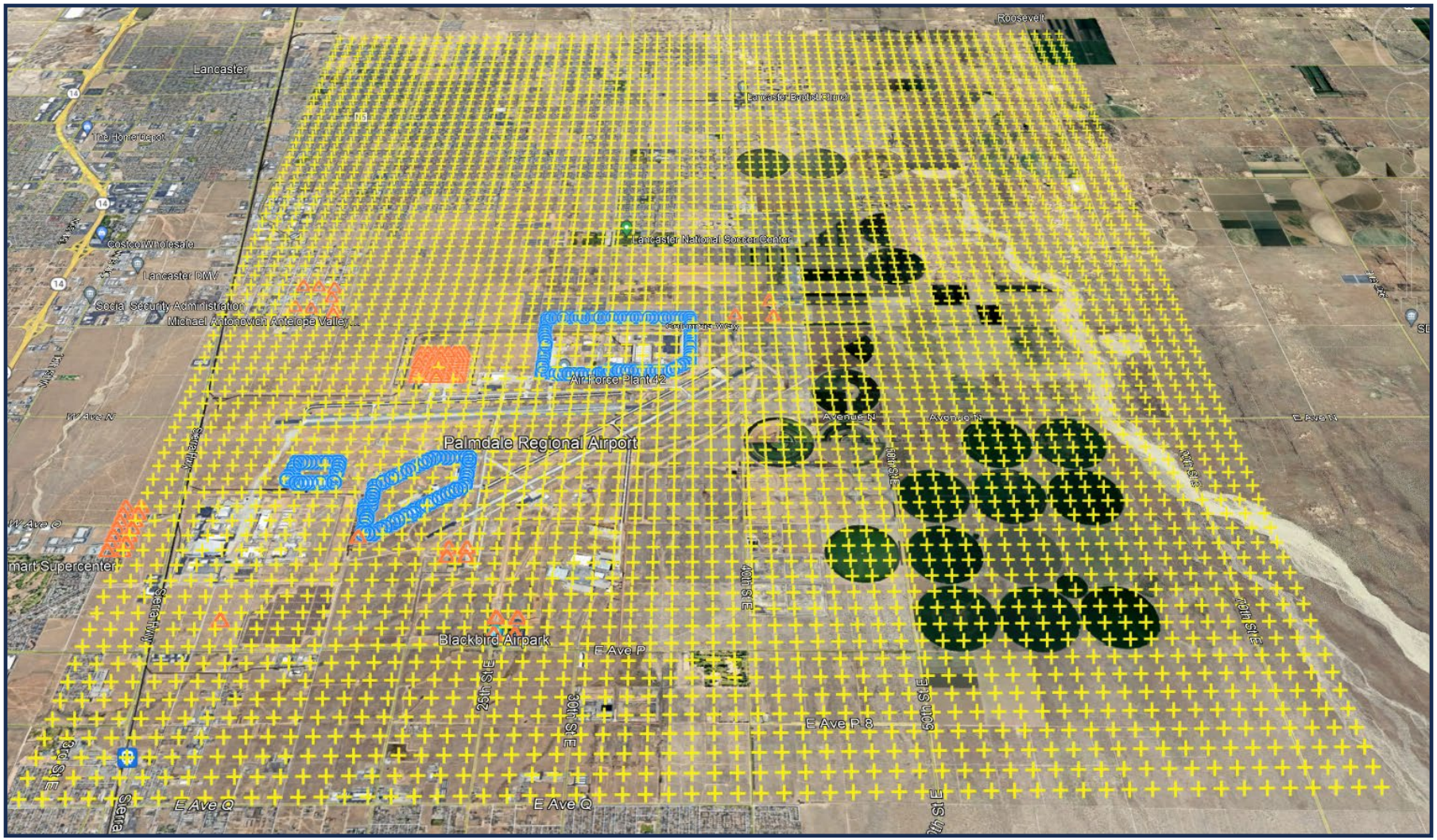

Cartesian Grid

Property Line

Sensitive

Figure 5: Receptor Locations

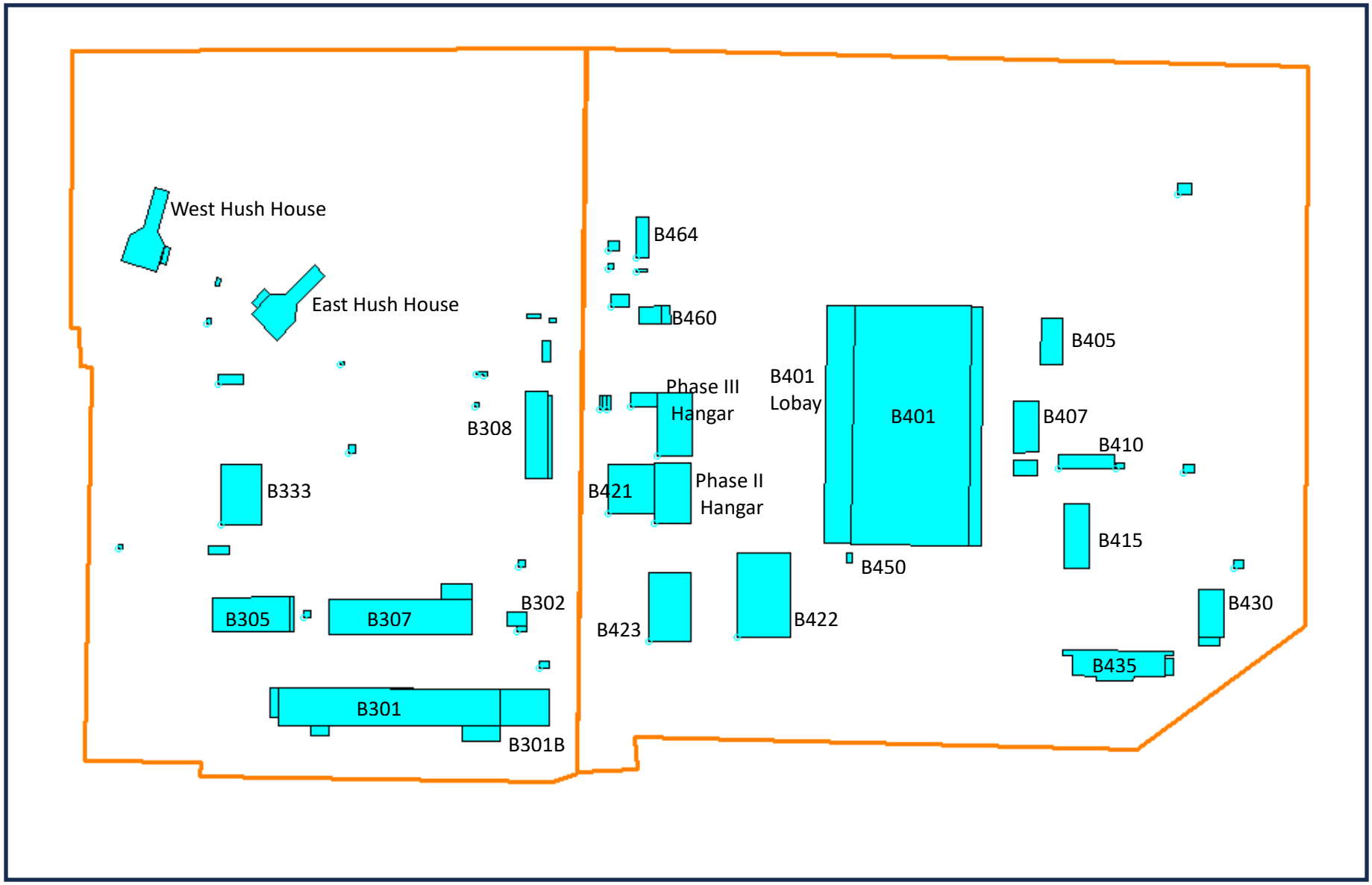

Figure 6: Locations of structures used to estimate downwash characteristics

Figure 7: Excess cancer risk associated with emissions from the permit action in conjunction with all existing sources assuming 30 year residential exposure

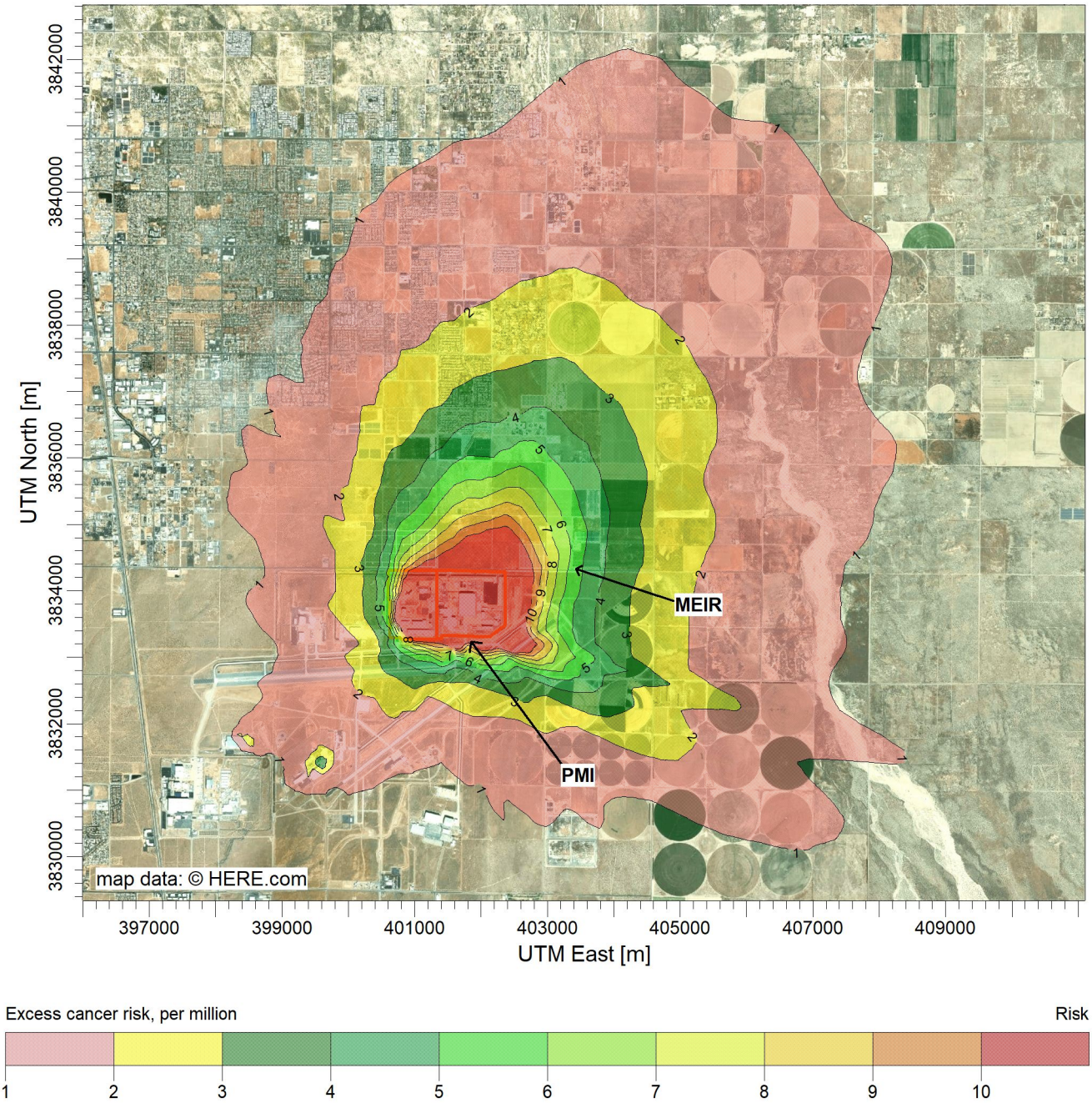

Verdant Environmental

SCALE: 1:95,044

0 3 km

AERMOD View - Lakes Environmental Software

Figure 8: Excess cancer risk associated with emissions from the permit action in conjunction with all existing sources assuming 25 year worker exposure

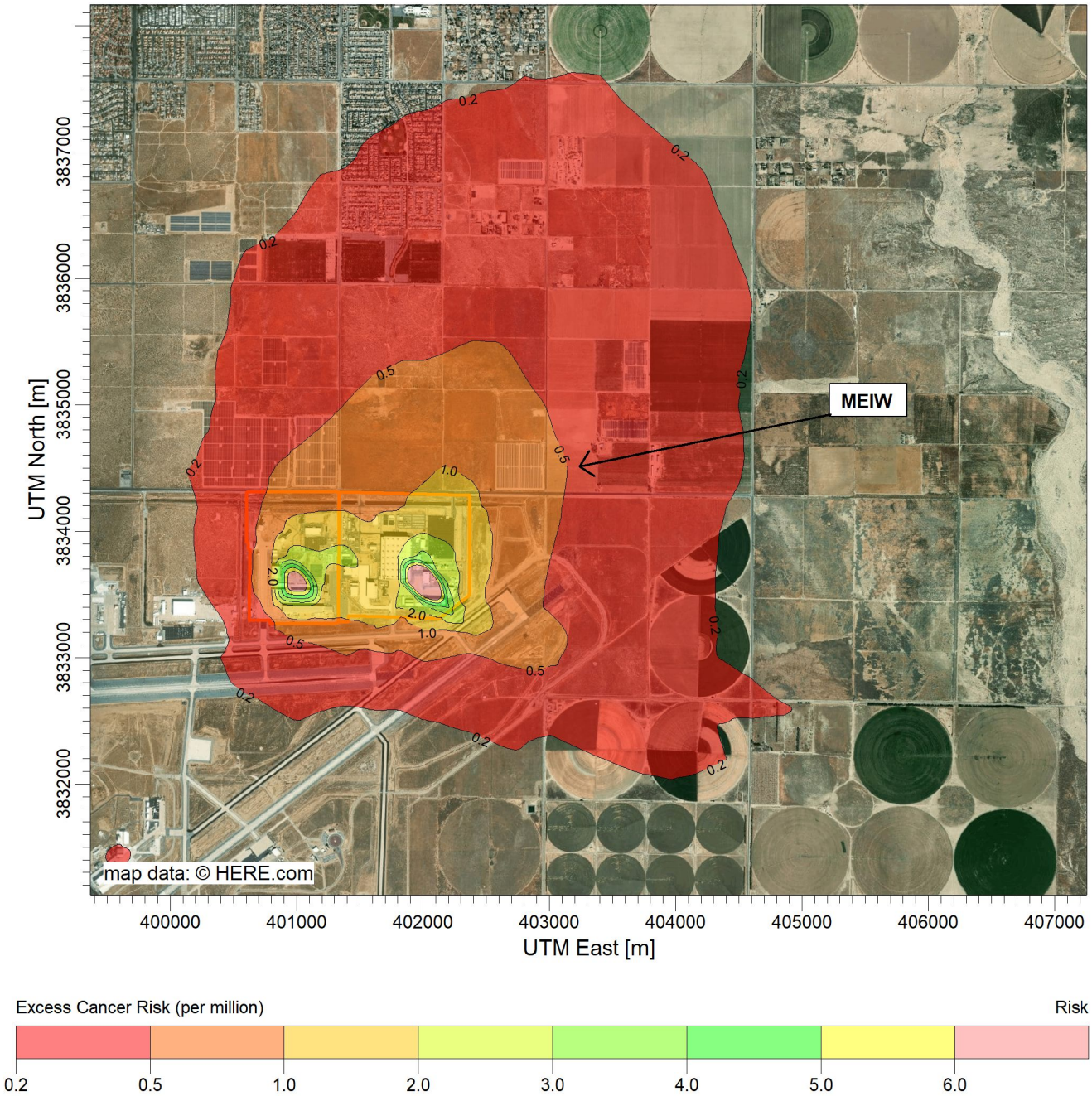

	77	**Verdant Environmental**	
	0		
	Concentration	SCALE: 1:49,618 0 1 km	
	12.3 Risk		

AERMOD View - Lakes Environmental Software

Figure 9: Chronic hazard associated with emissions from the permit action in conjunction with all existing sources assuming 30 year residential exposure

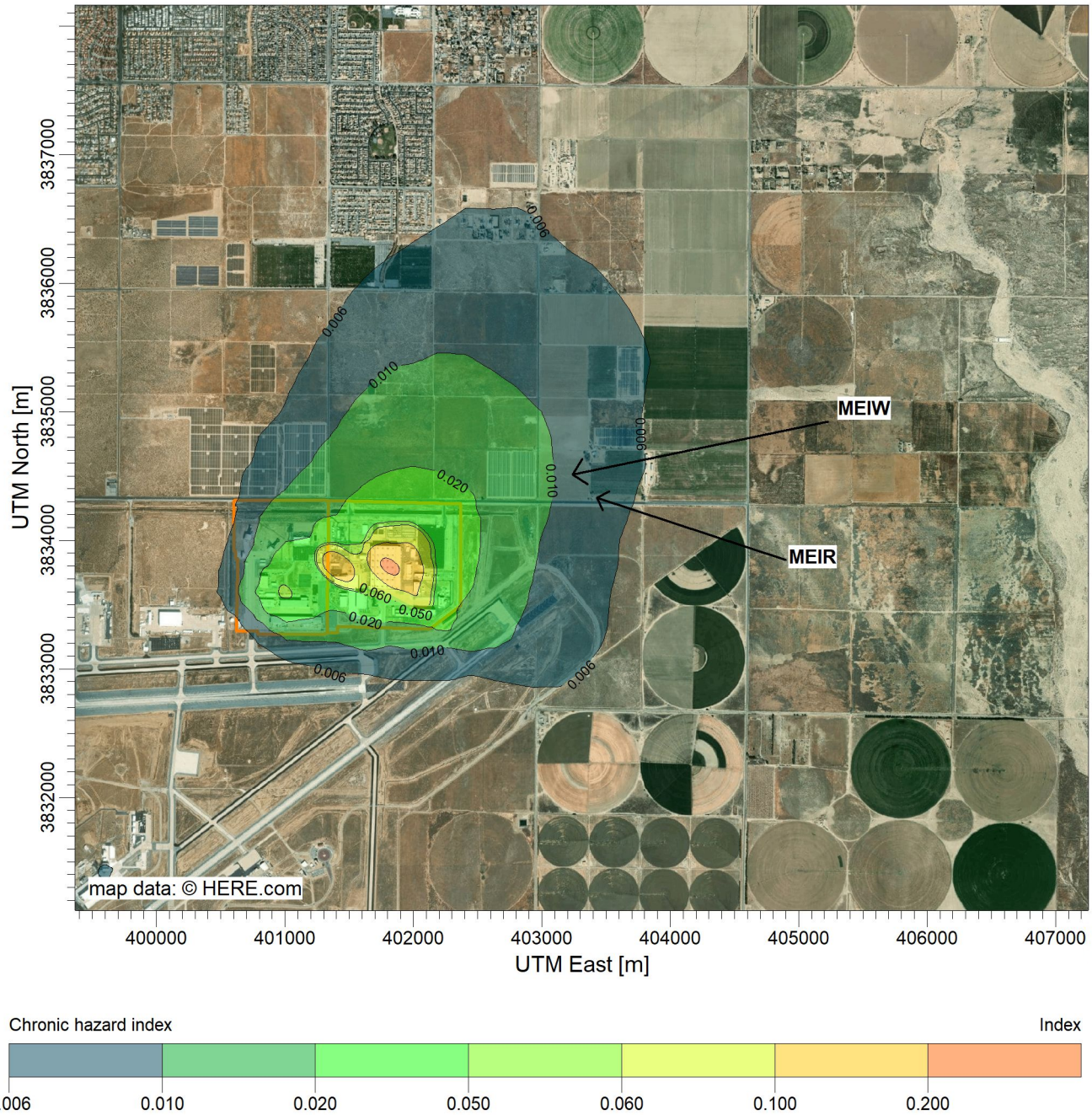

Verdant Environmental

SCALE: 1:49,638

0 1 km

AERMOD View - Lakes Environmental Software

Figure 9: Acute hazard associated with emissions from the permit action in conjunction with all existing sources

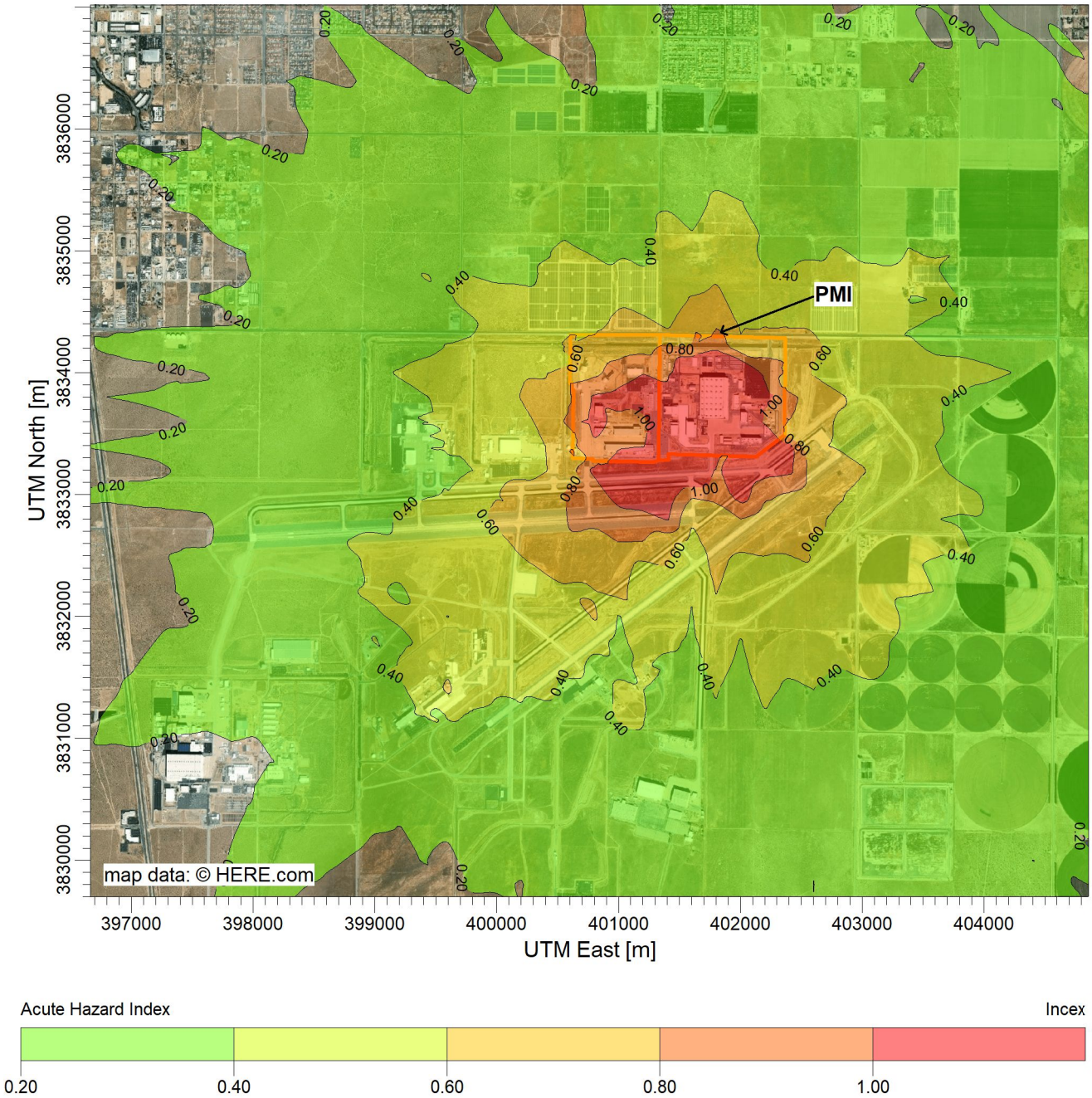

	77	**Verdant Environmental**	
	0		
	Concentration	SCALE: 1:51,546 0 2 km	
	2.61 Incex		

AERMOD View - Lakes Environmental Software

A

Cancer Burden Report

HARP POPULATION EXPOSURE ESTIMATE REPORT FOR CANCER RISK 9/29/2023 9:58:10 AM
RISK SCENARIO: 70YrCancerDerived_InhSoilDermMMilk

LINE	REC	X	Y	CANCER RISK	POPULATION BURDEN	CANCER POPULATION	CUMULATIVE BURDEN	CUMULATIVE
1	7986	401810	3833588	3.3535000e-05		0.0000000e+00		0.0000000e+00
2	8025	401897	3834243	1.7791000e-05		0.0000000e+00		0.0000000e+00
3	7985	401421	3834254	1.5325000e-05		0.0000000e+00		0.0000000e+00
4	7982	402155	3835118	1.0271000e-05	169	1.7357990e-03	169	1.7357990e-03
5	4455	403174	3834549	8.2768000e-06	7	5.7937600e-05	176	1.7937366e-03
6	4454	403353	3835422	6.2325000e-06		0.0000000e+00	176	1.7937366e-03
7	4456	403583	3834900	5.9818000e-06		0.0000000e+00	176	1.7937366e-03
8	4457	403588	3834496	5.6959000e-06	11	6.2654900e-05	187	1.8563915e-03
9	4720	402951	3836469	5.3017000e-06		0.0000000e+00	187	1.8563915e-03
10	4452	403354	3836115	5.1969000e-06	10	5.1969000e-05	197	1.9083605e-03
11	4719	402154	3836329	5.1834000e-06	205	1.0625970e-03	402	2.9709575e-03
12	4451	403035	3836532	5.0965000e-06		0.0000000e+00	402	2.9709575e-03
13	4450	403158	3836511	4.9199000e-06		0.0000000e+00	402	2.9709575e-03
14	4458	403817	3834560	4.8775000e-06		0.0000000e+00	402	2.9709575e-03
15	7989	403368	3832473	4.7231000e-06		0.0000000e+00	402	2.9709575e-03
16	4449	403308	3836526	4.6415000e-06		0.0000000e+00	402	2.9709575e-03
17	4453	403762	3836112	4.4827000e-06		0.0000000e+00	402	2.9709575e-03
18	4448	403491	3836518	4.4051000e-06		0.0000000e+00	402	2.9709575e-03
19	4766	400970	3835945	4.2546000e-06		0.0000000e+00	402	2.9709575e-03
20	7983	400518	3835145	4.1940000e-06		0.0000000e+00	402	2.9709575e-03
21	4447	403728	3836535	4.1776000e-06		0.0000000e+00	402	2.9709575e-03
22	4446	403852	3836417	4.1591000e-06		0.0000000e+00	402	2.9709575e-03
23	4406	403118	3837142	4.1159000e-06	12	4.9390800e-05	414	3.0203483e-03
24	4944	402059	3836888	4.1083000e-06	201	8.2576830e-04	615	3.8461166e-03
25	4443	404202	3835303	4.0996000e-06		0.0000000e+00	615	3.8461166e-03
26	4947	401785	3836873	3.9697000e-06	64	2.5406080e-04	679	4.1001774e-03
27	4942	402575	3837132	3.9318000e-06		0.0000000e+00	679	4.1001774e-03
28	4459	404222	3834490	3.9278000e-06		0.0000000e+00	679	4.1001774e-03
29	7990	399639	3831430	3.9130000e-06		0.0000000e+00	679	4.1001774e-03
30	4445	403955	3836611	3.8812000e-06		0.0000000e+00	679	4.1001774e-03
31	4946	402020	3837061	3.8365000e-06	91	3.4912150e-04	770	4.4492989e-03
32	4958	401609	3836932	3.7403000e-06	95	3.5532850e-04	865	4.8046274e-03
33	4444	404242	3836285	3.6888000e-06		0.0000000e+00	865	4.8046274e-03
34	7987	404193	3833474	3.6360000e-06		0.0000000e+00	865	4.8046274e-03
35	4945	401892	3837199	3.5653000e-06	426	1.5188178e-03	1291	6.3234452e-03
36	4957	401508	3836934	3.5047000e-06	437	1.5315539e-03	1728	7.8549991e-03
37	4943	402909	3837584	3.4115000e-06		0.0000000e+00	1728	7.8549991e-03
38	4403	403937	3837119	3.3949000e-06		0.0000000e+00	1728	7.8549991e-03
39	4948	401952	3837366	3.3513000e-06	142	4.7588460e-04	1870	8.3308837e-03
40	4956	401580	3837238	3.2371000e-06	225	7.2834750e-04	2095	9.0592312e-03
41	4940	402477	3837700	3.1507000e-06	44	1.3863080e-04	2139	9.1978620e-03
42	4937	402730	3837812	3.1165000e-06	86	2.6801900e-04	2225	9.4658810e-03
43	4404	403386	3837940	3.0622000e-06		0.0000000e+00	2225	9.4658810e-03
44	4941	402412	3837845	3.0220000e-06		0.0000000e+00	2225	9.4658810e-03
45	4938	402876	3838002	2.9790000e-06	40	1.1916000e-04	2265	9.5850410e-03
46	6398	404701	3832031	2.9726000e-06		0.0000000e+00	2265	9.5850410e-03
47	4955	401554	3837447	2.9361000e-06	98	2.8773780e-04	2363	9.8727788e-03
48	4954	401502	3837394	2.9207000e-06	252	7.3601640e-04	2615	1.0608795e-02
49	4408	404824	3836814	2.8420000e-06	13	3.6946000e-05	2628	1.0645741e-02
50	4721	400402	3836420	2.8349000e-06	10	2.8349000e-05	2638	1.0674090e-02
51	4934	402268	3837947	2.8325000e-06	110	3.1157500e-04	2748	1.0985665e-02
52	4953	401351	3837510	2.8033000e-06		0.0000000e+00	2748	1.0985665e-02
53	4939	402584	3838139	2.7720000e-06		0.0000000e+00	2748	1.0985665e-02
54	4935	402460	3838118	2.7678000e-06	72	1.9928160e-04	2820	1.1184947e-02
55	4407	404958	3836951	2.6966000e-06	25	6.7415000e-05	2845	1.1252362e-02
56	4936	402774	3838250	2.6849000e-06	50	1.3424500e-04	2895	1.1386607e-02
57	4865	400538	3836950	2.6708000e-06		0.0000000e+00	2895	1.1386607e-02
58	4951	401510	3837707	2.6298000e-06	81	2.1301380e-04	2976	1.1599621e-02
59	4724	400237	3835947	2.6291000e-06		0.0000000e+00	2976	1.1599621e-02
60	4874	401073	3837340	2.6029000e-06		0.0000000e+00	2976	1.1599621e-02
61	4949	401775	3837967	2.5991000e-06	411	1.0682301e-03	3387	1.2667851e-02
62	4952	401577	3837793	2.5834000e-06	76	1.9633840e-04	3463	1.2864189e-02
63	4872	401285	3837765	2.5305000e-06	107	2.7076350e-04	3570	1.3134953e-02
64	4873	401214	3837665	2.5112000e-06	107	2.6869840e-04	3677	1.3403651e-02
65	4950	401551	3837874	2.4957000e-06	98	2.4457860e-04	3775	1.3648230e-02

66	4405	403940	3838478	2.4794000e-06	2	4.9588000e-06	3777	1.3653188e-02
67	6396	405006	3833465	2.4766000e-06		0.0000000e+00	3777	1.3653188e-02
68	4409	405407	3836169	2.4746000e-06	1	2.4746000e-06	3778	1.3655663e-02
69	4442	405429	3835089	2.4552000e-06	13	3.1917600e-05	3791	1.3687581e-02
70	4402	405143	3837315	2.4392000e-06		0.0000000e+00	3791	1.3687581e-02
71	4399	405427	3836921	2.4166000e-06	18	4.3498800e-05	3809	1.3731079e-02
72	4866	400605	3837250	2.3989000e-06	11	2.6387900e-05	3820	1.3757467e-02
73	4869	401134	3837758	2.3452000e-06	95	2.2279400e-04	3915	1.3980261e-02
74	7988	403823	3831767	2.3078000e-06		0.0000000e+00	3915	1.3980261e-02
75	4870	401012	3837768	2.2833000e-06	181	4.1327730e-04	4096	1.4393539e-02
76	4875	400703	3837424	2.2747000e-06	27	6.1416900e-05	4123	1.4454956e-02
77	4871	401067	3837798	2.2746000e-06	88	2.0016480e-04	4211	1.4655120e-02
78	4930	402559	3838762	2.2741000e-06	176	4.0024160e-04	4387	1.5055362e-02
79	4856	401256	3838028	2.2613000e-06	56	1.2663280e-04	4443	1.5181995e-02
80	4393	405237	3837925	2.2176000e-06		0.0000000e+00	4443	1.5181995e-02
81	4400	405759	3836913	2.2171000e-06		0.0000000e+00	4443	1.5181995e-02
82	4857	401290	3838191	2.1737000e-06	75	1.6302750e-04	4518	1.5345022e-02
83	4858	400863	3837962	2.1694000e-06	296	6.4214240e-04	4814	1.5987165e-02
84	4932	402968	3839126	2.1369000e-06		0.0000000e+00	4814	1.5987165e-02
85	4389	404966	3838467	2.1282000e-06		0.0000000e+00	4814	1.5987165e-02
86	4862	400425	3837648	2.1051000e-06	24	5.0522400e-05	4838	1.6037687e-02
87	4855	401307	3838329	2.0917000e-06	46	9.6218200e-05	4884	1.6133905e-02
88	4853	401071	3838089	2.0820000e-06	326	6.7873200e-04	5210	1.6812637e-02
89	4854	401176	3838187	2.0706000e-06	160	3.3129600e-04	5370	1.7143933e-02
90	4859	400716	3837956	2.0566000e-06	544	1.1187904e-03	5914	1.8262724e-02
91	4861	400363	3837638	1.9980000e-06	151	3.0169800e-04	6065	1.8564422e-02
92	4863	400381	3837801	1.9761000e-06	53	1.0473330e-04	6118	1.8669155e-02
93	4928	400509	3837877	1.9619000e-06	6	1.1771400e-05	6124	1.8680926e-02
94	4588	403412	3839555	1.9600000e-06	706	1.3837600e-03	6830	2.0064686e-02
95	4927	400382	3837877	1.9386000e-06	55	1.0662300e-04	6885	2.0171309e-02
96	4864	400343	3837725	1.9292000e-06	94	1.8134480e-04	6979	2.0352654e-02
97	4394	405837	3837925	1.9247000e-06		0.0000000e+00	6979	2.0352654e-02
98	4860	400633	3838037	1.9010000e-06	83	1.5778300e-04	7062	2.0510437e-02
99	4851	401188	3838543	1.8802000e-06	298	5.6029960e-04	7360	2.1070737e-02
100	4907	400462	3838070	1.8665000e-06	56	1.0452400e-04	7416	2.1175261e-02
101	4587	404221	3839562	1.8588000e-06	5	9.2940000e-06	7421	2.1184555e-02
102	4868	400045	3837354	1.8586000e-06	117	2.1745620e-04	7538	2.1402011e-02
103	4909	400404	3838068	1.8560000e-06	53	9.8368000e-05	7591	2.1500379e-02
104	6393	405973	3834277	1.8513000e-06		0.0000000e+00	7591	2.1500379e-02
105	6392	405822	3833856	1.8370000e-06		0.0000000e+00	7591	2.1500379e-02
106	6395	405812	3833041	1.8355000e-06		0.0000000e+00	7591	2.1500379e-02
107	4590	403192	3839779	1.8312000e-06		0.0000000e+00	7591	2.1500379e-02
108	4922	400074	3837601	1.8199000e-06	186	3.3850140e-04	7777	2.1838880e-02
109	6397	406012	3831405	1.8164000e-06		0.0000000e+00	7777	2.1838880e-02
110	4929	400378	3838149	1.8010000e-06	76	1.3687600e-04	7853	2.1975756e-02
111	4931	401588	3838997	1.7877000e-06	18	3.2178600e-05	7871	2.2007935e-02
112	4905	400460	3838202	1.7868000e-06	43	7.6832400e-05	7914	2.2084767e-02
113	4906	400320	3838023	1.7799000e-06	31	5.5176900e-05	7945	2.2139944e-02
114	4898	400742	3838569	1.7715000e-06	43	7.6174500e-05	7988	2.2216119e-02
115	4852	401032	3838651	1.7683000e-06	161	2.8469630e-04	8149	2.2500815e-02
116	4589	403084	3839903	1.7646000e-06		0.0000000e+00	8149	2.2500815e-02
117	4395	406332	3838010	1.7526000e-06	7	1.2268200e-05	8156	2.2513083e-02
118	4933	401550	3839080	1.7483000e-06	41	7.1680300e-05	8197	2.2584764e-02
119	4902	400429	3838289	1.7471000e-06	32	5.5907200e-05	8229	2.2640671e-02
120	4908	400302	3838089	1.7346000e-06	43	7.4587800e-05	8272	2.2715259e-02
121	4392	405890	3838708	1.7340000e-06		0.0000000e+00	8272	2.2715259e-02
122	4723	399745	3836387	1.7336000e-06		0.0000000e+00	8272	2.2715259e-02
123	4390	405337	3839305	1.7316000e-06		0.0000000e+00	8272	2.2715259e-02
124	4912	400326	3838232	1.7238000e-06		0.0000000e+00	8272	2.2715259e-02
125	4581	403710	3840174	1.7162000e-06	34	5.8350800e-05	8306	2.2773609e-02
126	4926	400243	3837840	1.7145000e-06	45	7.7152500e-05	8351	2.2850762e-02
127	4584	403917	3840171	1.7093000e-06	20	3.4186000e-05	8371	2.2884948e-02
128	4397	406442	3836796	1.7052000e-06	1	1.7052000e-06	8372	2.2886653e-02
129	4582	403507	3840175	1.6982000e-06	16	2.7171200e-05	8388	2.2913824e-02
130	4722	399729	3836483	1.6965000e-06		0.0000000e+00	8388	2.2913824e-02
131	4586	404131	3840066	1.6925000e-06	7	1.1847500e-05	8395	2.2925672e-02
132	4925	400166	3837765	1.6885000e-06	130	2.1950500e-04	8525	2.3145177e-02
133	4867	399892	3837351	1.6876000e-06	220	3.7127200e-04	8745	2.3516449e-02
134	4913	400326	3838329	1.6857000e-06		0.0000000e+00	8745	2.3516449e-02
135	4876	401215	3839012	1.6757000e-06	278	4.6584460e-04	9023	2.3982293e-02
136	4396	406717	3837902	1.6637000e-06		0.0000000e+00	9023	2.3982293e-02
137	4391	405341	3839507	1.6580000e-06		0.0000000e+00	9023	2.3982293e-02

138	4410	406577	3835898	1.6569000e-06		0.0000000e+00	9023	2.3982293e-02
139	4388	404995	3839583	1.6529000e-06		0.0000000e+00	9023	2.3982293e-02
140	4878	401083	3838916	1.6527000e-06	151	2.4955770e-04	9174	2.4231851e-02
141	4585	404122	3840268	1.6384000e-06	11	1.8022400e-05	9185	2.4249873e-02
142	4591	402172	3839580	1.6377000e-06	429	7.0257330e-04	9614	2.4952447e-02
143	4880	400880	3838949	1.6286000e-06	94	1.5308840e-04	9708	2.5105535e-02
144	4593	403591	3840397	1.6248000e-06		0.0000000e+00	9708	2.5105535e-02
145	4594	403424	3840361	1.6216000e-06		0.0000000e+00	9708	2.5105535e-02
146	4877	400998	3839012	1.6012000e-06		0.0000000e+00	9708	2.5105535e-02
147	4583	403199	3840387	1.5894000e-06	11	1.7483400e-05	9719	2.5123019e-02
148	4897	400644	3838860	1.5833000e-06	118	1.8682940e-04	9837	2.5309848e-02
149	4879	401003	3839093	1.5832000e-06		0.0000000e+00	9837	2.5309848e-02
150	4901	400195	3838090	1.5819000e-06	583	9.2224770e-04	10420	2.6232096e-02
151	7984	398891	3835140	1.5817000e-06		0.0000000e+00	10420	2.6232096e-02
152	4579	404022	3840573	1.5718000e-06		0.0000000e+00	10420	2.6232096e-02
153	4578	403714	3840579	1.5667000e-06	13	2.0367100e-05	10433	2.6252463e-02
154	4918	400020	3838061	1.5583000e-06	52	8.1031600e-05	10485	2.6333494e-02
155	4910	400198	3838184	1.5548000e-06	48	7.4630400e-05	10533	2.6408125e-02
156	4904	400224	3838291	1.5513000e-06	28	4.3436400e-05	10561	2.6451561e-02
157	4577	403509	3840587	1.5507000e-06	19	2.9463300e-05	10580	2.6481024e-02
158	4923	399913	3837770	1.5264000e-06	312	4.7623680e-04	10892	2.6957261e-02
159	4762	399619	3837055	1.5083000e-06	15	2.2624500e-05	10907	2.6979886e-02
160	4881	400646	3839061	1.5075000e-06	181	2.7285750e-04	11088	2.7252743e-02
161	4828	399698	3837594	1.5071000e-06		0.0000000e+00	11088	2.7252743e-02
162	4911	399912	3838054	1.4947000e-06	31	4.6335700e-05	11119	2.7299079e-02
163	4903	399936	3838153	1.4944000e-06	289	4.3188160e-04	11408	2.7730961e-02
164	4580	404431	3840570	1.4923000e-06		0.0000000e+00	11408	2.7730961e-02
165	4387	405040	3840155	1.4890000e-06	4	5.9560000e-06	11412	2.7736917e-02
166	5089	401168	3839441	1.4844000e-06	178	2.6422320e-04	11590	2.8001140e-02
167	4385	405787	3839957	1.4805000e-06	2	2.9610000e-06	11592	2.8004101e-02
168	4919	399959	3838242	1.4658000e-06	56	8.2084800e-05	11648	2.8086186e-02
169	4735	399616	3837247	1.4598000e-06	112	1.6349760e-04	11760	2.8249683e-02
170	4831	399637	3837622	1.4541000e-06	27	3.9260700e-05	11787	2.8288944e-02
171	4592	401940	3839946	1.4514000e-06		0.0000000e+00	11787	2.8288944e-02
172	4383	407260	3838433	1.4378000e-06		0.0000000e+00	11787	2.8288944e-02
173	4441	407069	3835082	1.4376000e-06		0.0000000e+00	11787	2.8288944e-02
174	4384	406745	3838927	1.4340000e-06	6	8.6040000e-06	11793	2.8297548e-02
175	4558	402578	3840385	1.4292000e-06	7	1.0004400e-05	11800	2.8307552e-02
176	4760	399210	3836862	1.4111000e-06		0.0000000e+00	11800	2.8307552e-02
177	4559	401735	3840007	1.4075000e-06		0.0000000e+00	11800	2.8307552e-02
178	4498	406749	3839115	1.4034000e-06		0.0000000e+00	11800	2.8307552e-02
179	4386	405050	3840561	1.3990000e-06	2	2.7980000e-06	11802	2.8310350e-02
180	4924	399751	3837873	1.3990000e-06	12	1.6788000e-05	11814	2.8327138e-02
181	4891	400072	3838397	1.3960000e-06	114	1.5914400e-04	11928	2.8486282e-02
182	4882	400166	3838780	1.3924000e-06	7	9.7468000e-06	11935	2.8496029e-02
183	5090	401137	3839706	1.3907000e-06	72	1.0013040e-04	12007	2.8596159e-02
184	4883	400019	3838389	1.3880000e-06	82	1.1381600e-04	12089	2.8709975e-02
185	5080	400743	3839520	1.3875000e-06	691	9.5876250e-04	12780	2.9668738e-02
186	4917	399852	3838250	1.3844000e-06	34	4.7069600e-05	12814	2.9715808e-02
187	4885	400107	3838543	1.3803000e-06		0.0000000e+00	12814	2.9715808e-02
188	4736	399502	3837296	1.3783000e-06	97	1.3369510e-04	12911	2.9849503e-02
189	6394	406959	3834272	1.3773000e-06		0.0000000e+00	12911	2.9849503e-02
190	5088	401026	3839711	1.3687000e-06	64	8.7596800e-05	12975	2.9937099e-02
191	4398	407089	3836841	1.3655000e-06		0.0000000e+00	12975	2.9937099e-02
192	4829	399583	3837751	1.3611000e-06	104	1.4155440e-04	13079	3.0078654e-02
193	5091	400335	3839204	1.3604000e-06	84	1.1427360e-04	13163	3.0192927e-02
194	4830	399613	3837882	1.3589000e-06	31	4.2125900e-05	13194	3.0235053e-02
195	4354	406616	3839659	1.3579000e-06		0.0000000e+00	13194	3.0235053e-02
196	4920	399804	3838058	1.3579000e-06	42	5.7031800e-05	13236	3.0292085e-02
197	4557	402830	3840822	1.3527000e-06		0.0000000e+00	13236	3.0292085e-02
198	5087	401127	3839832	1.3507000e-06	111	1.4992770e-04	13347	3.0442013e-02
199	4890	400014	3838491	1.3447000e-06	182	2.4473540e-04	13529	3.0686748e-02
200	4491	407264	3837303	1.3399000e-06		0.0000000e+00	13529	3.0686748e-02
201	4492	407353	3837453	1.3353000e-06		0.0000000e+00	13529	3.0686748e-02
202	4819	399706	3837999	1.3351000e-06		0.0000000e+00	13529	3.0686748e-02
203	5078	401173	3839921	1.3309000e-06	148	1.9697320e-04	13677	3.0883721e-02
204	4916	399789	3838131	1.3270000e-06		0.0000000e+00	13677	3.0883721e-02
205	4761	399471	3836900	1.3249000e-06	12	1.5898800e-05	13689	3.0899620e-02
206	4556	402795	3840885	1.3235000e-06	15	1.9852500e-05	13704	3.0919473e-02
207	4914	399750	3838058	1.3188000e-06	18	2.3738400e-05	13722	3.0943211e-02
208	4555	402751	3840871	1.3175000e-06	27	3.5572500e-05	13749	3.0978784e-02
209	4540	402846	3840962	1.3123000e-06	28	3.6744400e-05	13777	3.1015528e-02

210	4818	399649	3838030	1.3097000e-06	61	7.9891700e-05	13838	3.1095420e-02
211	6391	407047	3833433	1.3072000e-06		0.0000000e+00	13838	3.1095420e-02
212	5079	400881	3839858	1.3064000e-06	95	1.2410800e-04	13933	3.1219528e-02
213	5092	400324	3839377	1.3052000e-06	309	4.0330680e-04	14242	3.1622835e-02
214	4921	399745	3838120	1.2955000e-06		0.0000000e+00	14242	3.1622835e-02
215	4887	399924	3838645	1.2945000e-06	35	4.5307500e-05	14277	3.1668142e-02
216	4532	403828	3841590	1.2895000e-06	13	1.6763500e-05	14290	3.1684906e-02
217	4827	399468	3837647	1.2858000e-06	70	9.0006000e-05	14360	3.1774912e-02
218	4892	399827	3838645	1.2828000e-06	60	7.6968000e-05	14420	3.1851880e-02
219	4357	405418	3840828	1.2804000e-06	6	7.6824000e-06	14426	3.1859562e-02
220	8009	401308	3831544	1.2799000e-06		0.0000000e+00	14426	3.1859562e-02
221	4889	399923	3838689	1.2766000e-06	31	3.9574600e-05	14457	3.1899137e-02
222	4539	402796	3841058	1.2725000e-06	33	4.1992500e-05	14490	3.1941129e-02
223	4823	399511	3837953	1.2713000e-06	159	2.0213670e-04	14649	3.2143266e-02
224	4554	402744	3841022	1.2710000e-06	26	3.3046000e-05	14675	3.2176312e-02
225	4899	399827	3838689	1.2706000e-06	53	6.7341800e-05	14728	3.2243654e-02
226	4738	399415	3837021	1.2682000e-06	16	2.0291200e-05	14744	3.2263945e-02
227	4537	402848	3841120	1.2668000e-06	20	2.5336000e-05	14764	3.2289281e-02
228	5093	400150	3839277	1.2630000e-06	20	2.5260000e-05	14784	3.2314541e-02
229	4571	401588	3840454	1.2601000e-06		0.0000000e+00	14784	3.2314541e-02
230	4895	399923	3838734	1.2596000e-06	30	3.7788000e-05	14814	3.2352329e-02
231	4493	407468	3837312	1.2580000e-06		0.0000000e+00	14814	3.2352329e-02
232	4915	399759	3838332	1.2568000e-06	77	9.6773600e-05	14891	3.2449102e-02
233	4893	399827	3838734	1.2563000e-06	69	8.6684700e-05	14960	3.2535787e-02
234	5066	401156	3840187	1.2547000e-06		0.0000000e+00	14960	3.2535787e-02
235	4730	398849	3836807	1.2456000e-06	47	5.8543200e-05	15007	3.2594330e-02
236	4401	407501	3836905	1.2419000e-06		0.0000000e+00	15007	3.2594330e-02
237	5081	400623	3839912	1.2412000e-06	55	6.8266000e-05	15062	3.2662596e-02
238	8004	401329	3831477	1.2368000e-06		0.0000000e+00	15062	3.2662596e-02
239	4888	399843	3838802	1.2347000e-06	128	1.5804160e-04	15190	3.2820638e-02
240	4538	402721	3841136	1.2328000e-06	26	3.2052800e-05	15216	3.2852691e-02
241	4826	399372	3837721	1.2298000e-06	122	1.5003560e-04	15338	3.3002726e-02
242	4575	402331	3840840	1.2260000e-06	95	1.1647000e-04	15433	3.3119196e-02
243	4355	406727	3840446	1.2247000e-06		0.0000000e+00	15433	3.3119196e-02
244	4545	402645	3841135	1.2180000e-06	14	1.7052000e-05	15447	3.3136248e-02
245	4570	401546	3840593	1.2159000e-06		0.0000000e+00	15447	3.3136248e-02
246	4900	399865	3838868	1.2138000e-06	164	1.9906320e-04	15611	3.3335311e-02
247	5083	400266	3839669	1.2138000e-06	229	2.7796020e-04	15840	3.3613272e-02
248	4894	399914	3838868	1.2109000e-06		0.0000000e+00	15840	3.3613272e-02
249	4574	402448	3840997	1.2074000e-06	130	1.5696200e-04	15970	3.3770234e-02
250	4884	399741	3838668	1.2066000e-06		0.0000000e+00	15970	3.3770234e-02
251	4353	407481	3839516	1.2063000e-06	2	2.4126000e-06	15972	3.3772646e-02
252	5082	400453	3839798	1.2062000e-06	154	1.8575480e-04	16126	3.3958401e-02
253	5094	400080	3839356	1.2056000e-06	91	1.0970960e-04	16217	3.4068111e-02
254	5071	401259	3840456	1.2011000e-06	38	4.5641800e-05	16255	3.4113752e-02
255	4824	399459	3838122	1.1975000e-06	22	2.6345000e-05	16277	3.4140097e-02
256	7996	402339	3830567	1.1972000e-06		0.0000000e+00	16277	3.4140097e-02
257	4886	399741	3838735	1.1967000e-06		0.0000000e+00	16277	3.4140097e-02
258	4896	399823	3838908	1.1965000e-06	191	2.2853150e-04	16468	3.4368629e-02
259	4813	399517	3838264	1.1961000e-06	320	3.8275200e-04	16788	3.4751381e-02
260	8000	401349	3831409	1.1954000e-06		0.0000000e+00	16788	3.4751381e-02
261	4576	402220	3840888	1.1929000e-06	16	1.9086400e-05	16804	3.4770467e-02
262	4544	402587	3841183	1.1922000e-06	396	4.7211120e-04	17200	3.5242579e-02
263	4741	398978	3837246	1.1919000e-06	70	8.3433000e-05	17270	3.5326012e-02
264	4727	398394	3836376	1.1882000e-06	61	7.2480200e-05	17331	3.5398492e-02
265	4725	398976	3836332	1.1795000e-06	193	2.2764350e-04	17524	3.5626135e-02
266	4494	407688	3837321	1.1794000e-06		0.0000000e+00	17524	3.5626135e-02
267	4825	399397	3838022	1.1778000e-06	126	1.4840280e-04	17650	3.5774538e-02
268	4850	399668	3838475	1.1739000e-06		0.0000000e+00	17650	3.5774538e-02
269	4565	401714	3840825	1.1738000e-06	12	1.4085600e-05	17662	3.5788624e-02
270	5072	401283	3840585	1.1733000e-06	90	1.0559700e-04	17752	3.5894221e-02
271	4820	399255	3837788	1.1724000e-06	118	1.3834320e-04	17870	3.6032564e-02
272	4352	407952	3839457	1.1708000e-06	4	4.6832000e-06	17874	3.6037247e-02
273	5075	401207	3840546	1.1705000e-06	34	3.9797000e-05	17908	3.6077044e-02
274	5055	400766	3840316	1.1678000e-06	242	2.8260760e-04	18150	3.6359652e-02
275	5084	400096	3839602	1.1648000e-06		0.0000000e+00	18150	3.6359652e-02
276	4573	402266	3841024	1.1641000e-06	50	5.8205000e-05	18200	3.6417857e-02
277	4560	402061	3840926	1.1631000e-06	10	1.1631000e-05	18210	3.6429488e-02
278	5073	401291	3840640	1.1619000e-06	6	6.9714000e-06	18216	3.6436459e-02
279	5099	399987	3839246	1.1616000e-06	43	4.9948800e-05	18259	3.6486408e-02
280	4568	401715	3840883	1.1596000e-06	28	3.2468800e-05	18287	3.6518877e-02
281	4849	399548	3838403	1.1583000e-06	86	9.9613800e-05	18373	3.6618490e-02

282	5086	400079	3839603	1.1562000e-06		0.0000000e+00	18373	3.6618490e-02
283	4495	407787	3837147	1.1558000e-06		0.0000000e+00	18373	3.6618490e-02
284	4567	401667	3840898	1.1527000e-06	49	5.6482300e-05	18422	3.6674973e-02
285	5074	401212	3840632	1.1509000e-06	28	3.2225200e-05	18450	3.6707198e-02
286	4533	404226	3842320	1.1493000e-06		0.0000000e+00	18450	3.6707198e-02
287	4356	405469	3841577	1.1488000e-06	6	6.8928000e-06	18456	3.6714091e-02
288	4569	401711	3840933	1.1478000e-06	27	3.0990600e-05	18483	3.6745081e-02
289	4535	404181	3842328	1.1463000e-06	4	4.5852000e-06	18487	3.6749667e-02
290	5067	401055	3840588	1.1456000e-06	44	5.0406400e-05	18531	3.6800073e-02
291	4381	408313	3838727	1.1441000e-06		0.0000000e+00	18531	3.6800073e-02
292	4566	401648	3840930	1.1438000e-06	99	1.1323620e-04	18630	3.6913309e-02
293	5070	401217	3840668	1.1433000e-06	24	2.7439200e-05	18654	3.6940748e-02
294	5068	401110	3840628	1.1413000e-06	28	3.1956400e-05	18682	3.6972705e-02
295	5095	399985	3839371	1.1406000e-06	42	4.7905200e-05	18724	3.7020610e-02
296	4534	404181	3842376	1.1369000e-06		0.0000000e+00	18724	3.7020610e-02
297	4846	399724	3839011	1.1369000e-06		0.0000000e+00	18724	3.7020610e-02
298	5069	401264	3840732	1.1349000e-06	13	1.4753700e-05	18737	3.7035364e-02
299	4845	399588	3838535	1.1286000e-06	50	5.6430000e-05	18787	3.7091794e-02
300	4546	402513	3841363	1.1284000e-06	100	1.1284000e-04	18887	3.7204634e-02
301	5135	400463	3840176	1.1278000e-06	228	2.5713840e-04	19115	3.7461772e-02
302	4351	408331	3839509	1.1251000e-06	2	2.2502000e-06	19117	3.7464022e-02
303	4728	398692	3836958	1.1239000e-06	104	1.1688560e-04	19221	3.7580908e-02
304	4572	402315	3841224	1.1235000e-06	265	2.9772750e-04	19486	3.7878635e-02
305	4737	399270	3837219	1.1231000e-06	369	4.1442390e-04	19855	3.8293059e-02
306	4726	398352	3836600	1.1225000e-06	274	3.0756500e-04	20129	3.8600624e-02
307	4740	399011	3837328	1.1217000e-06	56	6.2815200e-05	20185	3.8663439e-02
308	4832	399724	3839111	1.1207000e-06		0.0000000e+00	20185	3.8663439e-02
309	4742	398756	3837332	1.1201000e-06	147	1.6465470e-04	20332	3.8828094e-02
310	4700	397975	3835347	1.1195000e-06	2	2.2390000e-06	20334	3.8830333e-02
311	4411	408323	3836597	1.1191000e-06	2	2.2382000e-06	20336	3.8832571e-02
312	5062	400891	3840642	1.1184000e-06	92	1.0289280e-04	20428	3.8935464e-02
313	8014	398638	3833349	1.1154000e-06		0.0000000e+00	20428	3.8935464e-02
314	4731	398674	3837236	1.1123000e-06	177	1.9687710e-04	20605	3.9132341e-02
315	5060	400657	3840515	1.1099000e-06	24	2.6637600e-05	20629	3.9158979e-02
316	5056	400567	3840411	1.1085000e-06	4	4.4340000e-06	20633	3.9163413e-02
317	4339	407497	3840326	1.1027000e-06	3	3.3081000e-06	20636	3.9166721e-02
318	5058	400592	3840475	1.1021000e-06	18	1.9837800e-05	20654	3.9186559e-02
319	4536	402817	3841762	1.0970000e-06	38	4.1686000e-05	20692	3.9228245e-02
320	4496	408016	3837318	1.0969000e-06		0.0000000e+00	20692	3.9228245e-02
321	4440	408277	3835065	1.0919000e-06	6	6.5514000e-06	20698	3.9234796e-02
322	4844	399440	3838539	1.0919000e-06	248	2.7079120e-04	20946	3.9505587e-02
323	4561	401771	3841199	1.0899000e-06	128	1.3950720e-04	21074	3.9645095e-02
324	5064	400656	3840624	1.0872000e-06		0.0000000e+00	21074	3.9645095e-02
325	4840	399550	3838671	1.0850000e-06	411	4.4593500e-04	21485	4.0091030e-02
326	5061	400603	3840569	1.0848000e-06	15	1.6272000e-05	21500	4.0107302e-02
327	4358	404844	3842586	1.0844000e-06		0.0000000e+00	21500	4.0107302e-02
328	4699	397981	3835754	1.0832000e-06	8	8.6656000e-06	21508	4.0115967e-02
329	5057	400692	3840679	1.0822000e-06		0.0000000e+00	21508	4.0115967e-02
330	5096	399926	3839524	1.0804000e-06	114	1.2316560e-04	21622	4.0239133e-02
331	4500	408219	3837146	1.0802000e-06	8	8.6416000e-06	21630	4.0247774e-02
332	4563	402308	3841413	1.0797000e-06	290	3.1311300e-04	21920	4.0560887e-02
333	5098	399895	3839455	1.0793000e-06	57	6.1520100e-05	21977	4.0622407e-02
334	5097	399820	3839325	1.0786000e-06	53	5.7165800e-05	22030	4.0679573e-02
335	4817	399169	3838080	1.0773000e-06	282	3.0379860e-04	22312	4.0983372e-02
336	4564	402496	3841577	1.0764000e-06	25	2.6910000e-05	22337	4.1010282e-02
337	4743	398696	3837451	1.0749000e-06	142	1.5263580e-04	22479	4.1162918e-02
338	5059	400692	3840734	1.0712000e-06		0.0000000e+00	22479	4.1162918e-02
339	5076	400589	3840624	1.0709000e-06	13	1.3921700e-05	22492	4.1176839e-02
340	4763	398075	3835964	1.0691000e-06		0.0000000e+00	22492	4.1176839e-02
341	4326	406698	3841570	1.0688000e-06	7	7.4816000e-06	22499	4.1184321e-02
342	5131	400525	3840540	1.0669000e-06	31	3.3073900e-05	22530	4.1217395e-02
343	5130	400438	3840459	1.0655000e-06	40	4.2620000e-05	22570	4.1260015e-02
344	4412	408199	3837291	1.0650000e-06		0.0000000e+00	22570	4.1260015e-02
345	5077	400625	3840707	1.0625000e-06	20	2.1250000e-05	22590	4.1281265e-02
346	4739	399134	3837405	1.0621000e-06	70	7.4347000e-05	22660	4.1355612e-02
347	5142	400467	3840539	1.0551000e-06	34	3.5873400e-05	22694	4.1391485e-02
348	5065	400680	3840815	1.0538000e-06	17	1.7914600e-05	22711	4.1409400e-02
349	4338	407308	3841162	1.0537000e-06		0.0000000e+00	22711	4.1409400e-02
350	4733	398754	3837515	1.0485000e-06	68	7.1298000e-05	22779	4.1480698e-02
351	5063	400585	3840735	1.0477000e-06	12	1.2572400e-05	22791	4.1493270e-02
352	5085	399925	3839784	1.0460000e-06		0.0000000e+00	22791	4.1493270e-02
353	5049	400719	3840900	1.0449000e-06	38	3.9706200e-05	22829	4.1532976e-02

354	5132	400527	3840695	1.0431000e-06	14	1.4603400e-05	22843	4.1547580e-02
355	5041	401259	3841165	1.0427000e-06	7	7.2989000e-06	22850	4.1554879e-02
356	4497	408297	3837904	1.0409000e-06		0.0000000e+00	22850	4.1554879e-02
357	5141	400467	3840635	1.0372000e-06		0.0000000e+00	22850	4.1554879e-02
358	4562	401775	3841476	1.0371000e-06	219	2.2712490e-04	23069	4.1782004e-02
359	7998	401060	3830846	1.0358000e-06		0.0000000e+00	23069	4.1782004e-02
360	4547	402394	3841690	1.0350000e-06	24	2.4840000e-05	23093	4.1806844e-02
361	5133	400402	3840584	1.0329000e-06	79	8.1599100e-05	23172	4.1888443e-02
362	4814	399119	3838244	1.0316000e-06	264	2.7234240e-04	23436	4.2160785e-02
363	4767	398163	3836615	1.0310000e-06	99	1.0206900e-04	23535	4.2262854e-02
364	4839	399520	3838867	1.0306000e-06	154	1.5871240e-04	23689	4.2421567e-02
365	5042	401147	3841180	1.0290000e-06	10	1.0290000e-05	23699	4.2431857e-02
366	4848	399214	3838403	1.0256000e-06	144	1.4768640e-04	23843	4.2579543e-02
367	5051	401106	3841193	1.0246000e-06	44	4.5082400e-05	23887	4.2624625e-02
368	5046	400631	3840928	1.0232000e-06	112	1.1459840e-04	23999	4.2739224e-02
369	5052	401068	3841192	1.0227000e-06	12	1.2272400e-05	24011	4.2751496e-02
370	5045	400603	3840923	1.0194000e-06		0.0000000e+00	24011	4.2751496e-02
371	5134	400438	3840709	1.0182000e-06	51	5.1928200e-05	24062	4.2803424e-02
372	5050	400940	3841169	1.0180000e-06	12	1.2216000e-05	24074	4.2815640e-02
373	4734	399073	3837506	1.0167000e-06	91	9.2519700e-05	24165	4.2908160e-02
374	6400	407968	3832172	1.0167000e-06		0.0000000e+00	24165	4.2908160e-02
375	5054	400724	3841066	1.0155000e-06	60	6.0930000e-05	24225	4.2969090e-02
376	4732	398499	3837434	1.0123000e-06	74	7.4910200e-05	24299	4.3044000e-02
377	4729	398546	3837059	1.0119000e-06	79	7.9940100e-05	24378	4.3123940e-02
378	5047	400576	3840927	1.0119000e-06	91	9.2082900e-05	24469	4.3216023e-02
379	5136	400057	3840369	1.0099000e-06	338	3.4134620e-04	24807	4.3557369e-02
380	8008	401502	3831036	1.0056000e-06		0.0000000e+00	24807	4.3557369e-02
381	5129	400350	3840690	1.0055000e-06	141	1.4177550e-04	24948	4.3699145e-02
382	4382	408710	3838592	1.0030000e-06		0.0000000e+00	24948	4.3699145e-02
383	8013	398213	3834109	1.0029000e-06		0.0000000e+00	24948	4.3699145e-02
384	4340	408337	3840319	1.0008000e-06	3	3.0024000e-06	24951	4.3702147e-02
385	4701	397774	3835351	1.0008000e-06	15	1.5012000e-05	24966	4.3717159e-02
386	4833	399518	3839066	1.0008000e-06		0.0000000e+00	24966	4.3717159e-02
387	4438	409110	3836071	1.0004000e-06		0.0000000e+00	24966	4.3717159e-02